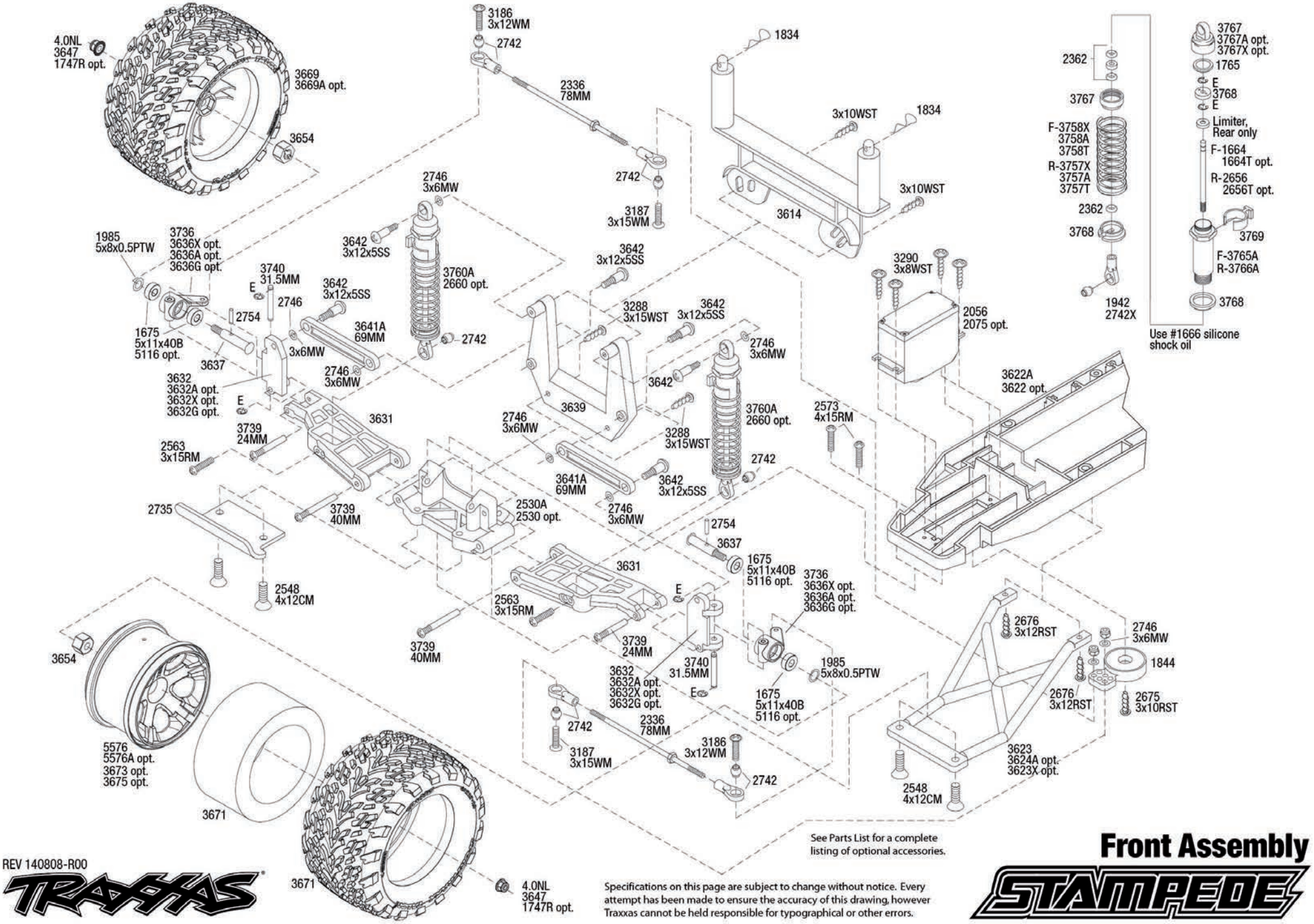

See Parts List for a complete listing of optional accessories.

REV 140808-R00

TRAXXAS

Specifications on this page are subject to change without notice. Every attempt has been made to ensure the accuracy of this drawing, however Traxxas cannot be held responsible for typographical or other errors.

Front Assembly

STAMPEDE

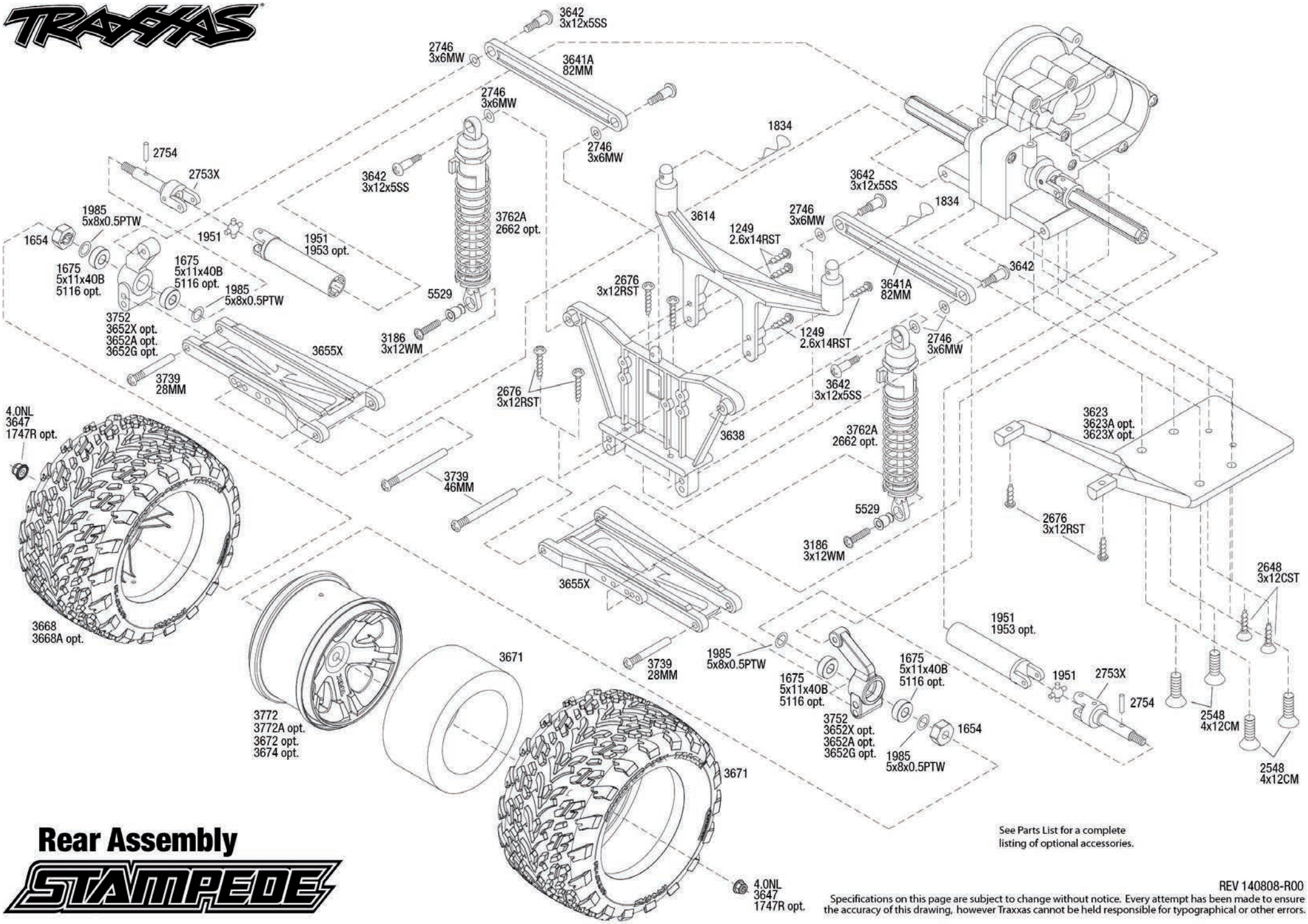

Rear Assembly

STAMPEDE

See Parts List for a complete listing of optional accessories.

REV 140808-R00

Specifications on this page are subject to change without notice. Every attempt has been made to ensure the accuracy of this drawing, however Traxxas cannot be held responsible for typographical or other errors.

STAMPEDE
Transmission Assembly

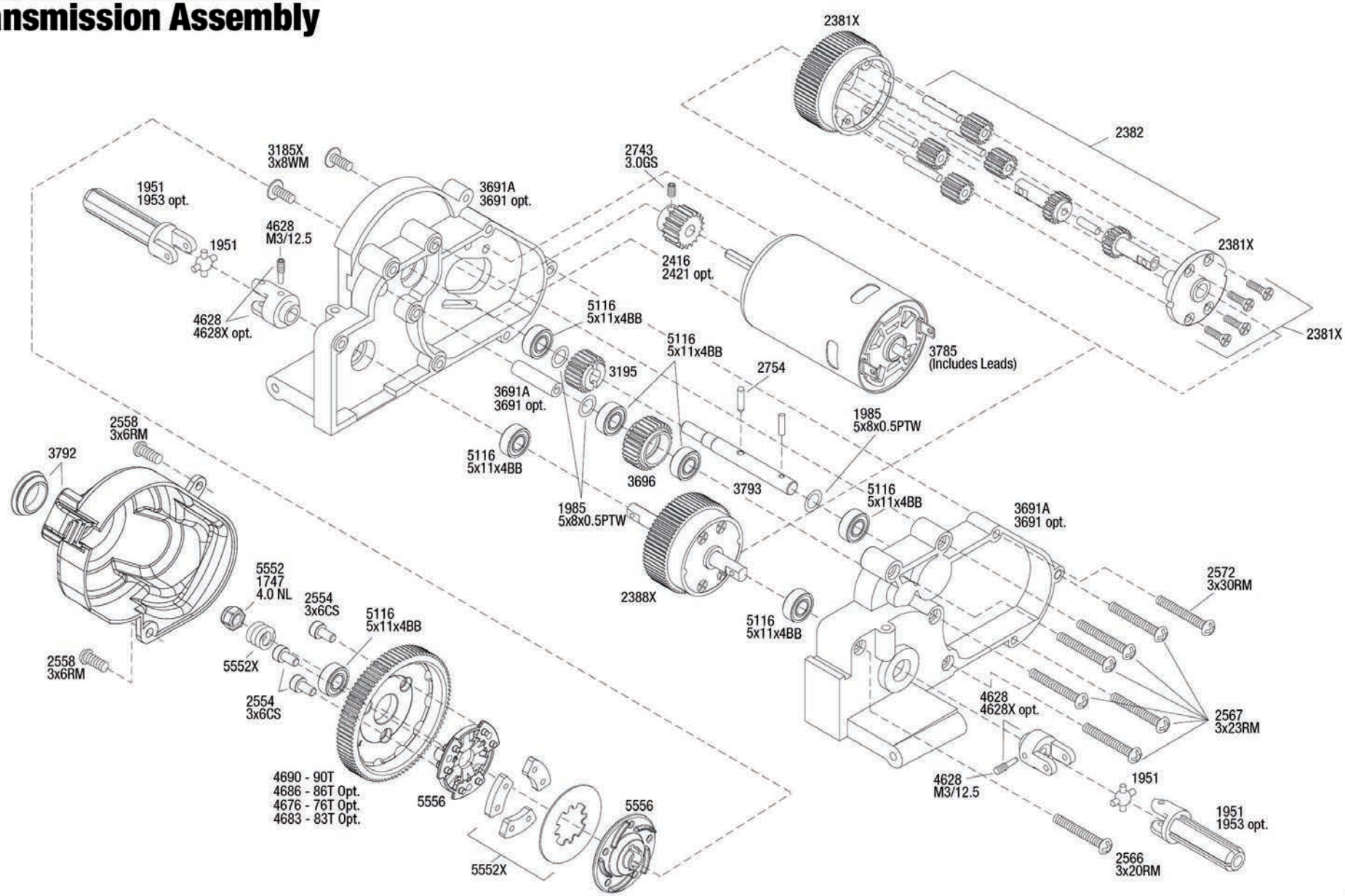

REV 140808-R00

See Parts List for a complete listing of optional accessories.

Specifications on this page are subject to change without notice. Every attempt has been made to ensure the accuracy of this drawing, however Traxxas cannot be held responsible for typographical or other errors.

STAMPEDE

Chassis Assembly

Specifications on this page are subject to change without notice. Every attempt has been made to ensure the accuracy of this drawing, however Traxxas cannot be held responsible for typographical or other errors.

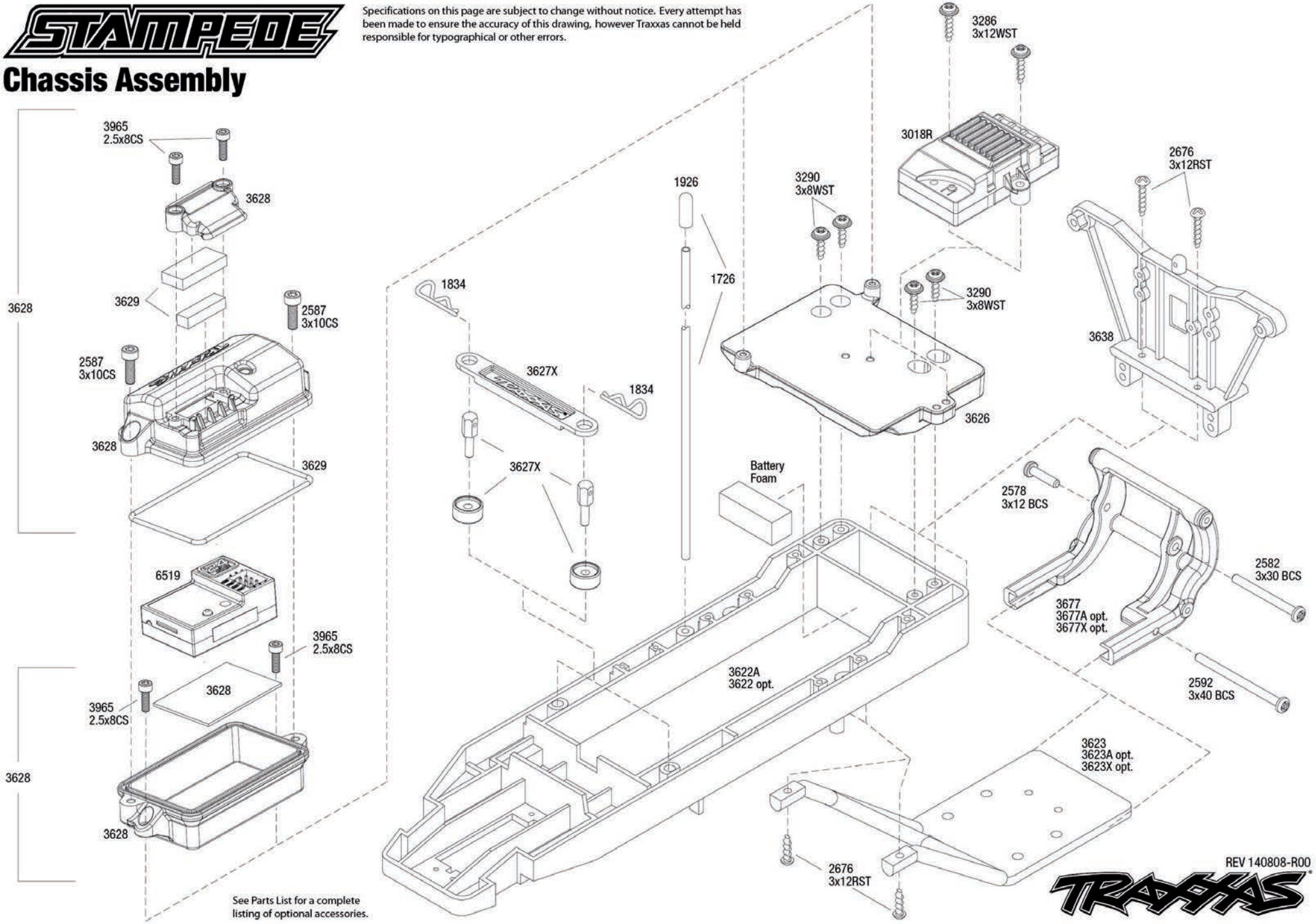

See Parts List for a complete listing of optional accessories.

REV 140808-R00

TRAXXAS