T70-12V

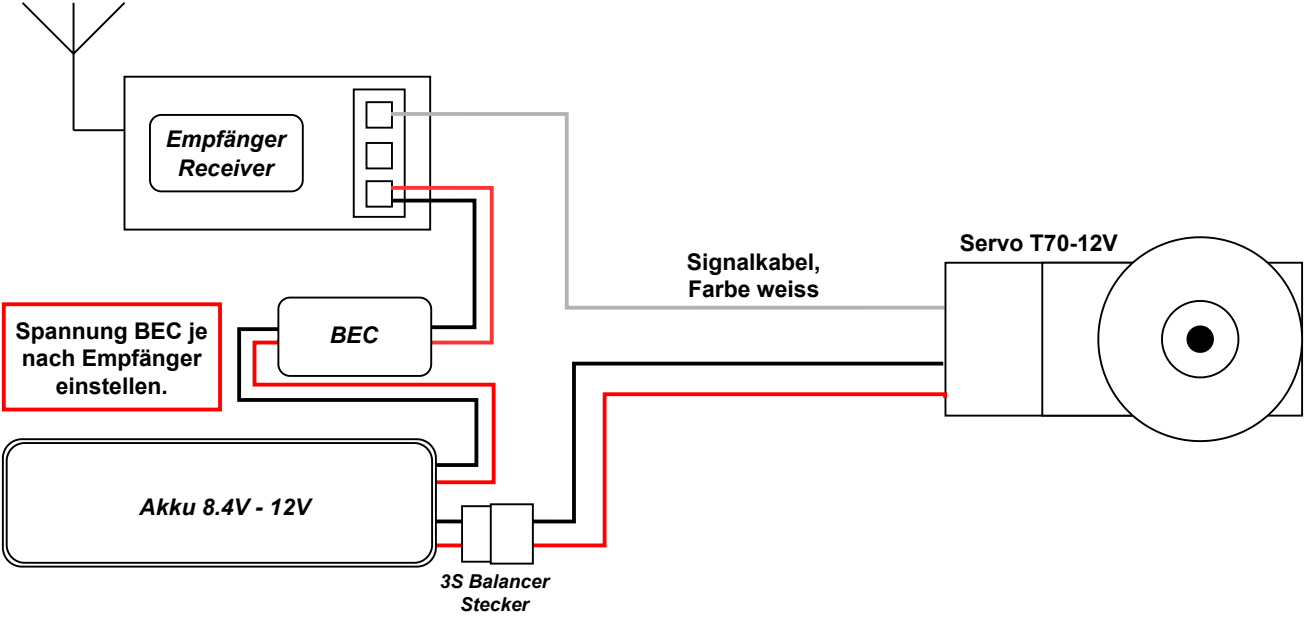

Copyright by Hobby Shop Hässig AG, April 2023