Pocher®

PAGANI
AUTOMOBILI MODENA

Utopia

Instruction Manual

"More than four thousand stylistic drawings, ten scale models, one wind tunnel model, two 1:1 scale models and countless ideas, research and experiments on eight complete prototypes for a team effort that lasted more than six years. We put our passion, effort and sacrifice into creating something timeless and cutting-edge in terms of technology."

Horacio Pagani

Utopia

Paganis Act III, marking the third decade of Horacio Paganis company, introduced the Utopia model, which represents the pinnacle of automotive artistry and innovation.

English:
The Pagani Utopia is a symphony of engineering and artistry, where every detail is meticulously crafted to perfection. At its core lies a Mercedes-derived V12 engine, a powerhouse that delivers breathtaking performance. The interior is a sanctuary of beauty, adorned with hand-stitched leather and intricate aluminium accents, creating an atmosphere of unparalleled elegance. Sumptuous materials like carbon-titanium weave through the design, ensuring both strength and a feather-light touch. Each element, from the precision of the controls to the flawless finish, invites you to explore further and experience the epitome of automotive luxury.

Italiano:
La Pagani Utopia è una sinfonia di ingegneria e arte, dove ogni dettaglio è meticolosamente realizzato alla perfezione. Al suo cuore si trova un motore V12 derivato dalla Mercedes, un potente propulsore che offre prestazioni mozzafiato. L'interno è un santuario di bellezza, adornato con pelle cucita a mano e intricati accenti in alluminio, creando un'atmosfera di eleganza senza pari. Materiali sontuosi come il carbonio-titanio si intrecciano nel design, garantendo sia forza che leggerezza. Ogni elemento, dalla precisione dei comandi alla finitura impeccabile, invita a esplorare ulteriormente e a vivere l'apice del lusso automobilistico.

Deutsch:
Die Pagani Utopia ist eine Symphonie aus Ingenieurskunst und Kunstfertigkeit, bei der jedes Detail akribisch zur Perfektion gefertigt ist. Im Kern befindet sich ein V12-Motor aus Mercedes, ein Kraftpaket, das atemberaubende Leistung liefert. Das Interieur ist ein Heiligtum der Schönheit, geschmückt mit handgenähtem Leder und filigranen Aluminiumakzenten, die eine Atmosphäre unvergleichlicher Eleganz schaffen. Üppige Materialien wie Karbon-Titan durchziehen das Design und sorgen sowohl für Stärke als auch für ein federleichtes Gefühl. Jedes Element, von der Präzision der Bedienelemente bis hin zur makellosen Verarbeitung, lädt dazu ein, weiter zu erkunden und das Nonplusultra des automobilen Luxus zu erleben.

Français:
La Pagani Utopia est une symphonie d'ingénierie et d'art, où chaque détail est méticuleusement conçu à la perfection. En son cœur se trouve un moteur V12 dérivé de Mercedes, une puissance qui offre des performances à couper le souffle. L'intérieur est un sanctuaire de beauté, orné de cuir cousu main et d'accents en aluminium complexes, créant une atmosphère d'élégance inégalée. Des matériaux somptueux comme le carbone-titane traversent le design, assurant à la fois force et légèreté. Chaque élément, de la précision des commandes à la finition impeccable, invite à explorer davantage et à vivre l'apogée du luxe automobile.

Español:
La Pagani Utopia es una sinfonía de ingeniería y arte, donde cada detalle está meticulosamente elaborado a la perfección. En su núcleo se encuentra un motor V12 derivado de Mercedes, una potencia que ofrece un rendimiento impresionante. El interior es un santuario de belleza, adornado con cuero cosido a mano y acentos de aluminio intrincados, creando una atmósfera de elegancia inigualable. Materiales suntuosos como el carbono-titanio se entrelazan en el diseño, asegurando tanto fuerza como una ligereza extrema. Cada elemento, desde la precisión de los controles hasta el acabado impecable, invita a explorar más y a experimentar la cúspide del lujo automotriz.

日本語:
パガーニ・ユートピアは、工学と芸術の交響曲であり、すべてのディテールが完璧に作り上げられています。その中心には、メルセデス由来のV12エンジンがあり、息をのむようなパフォーマンスを提供します。インテリアは美の聖域であり、手縫いの革と精巧なアルミニウムのアクセントで飾られ、比類のないエレガンスを醸し出しています。カーボンチタンのような豪華な素材がデザインに織り込まれ、強度と軽さを両立させています。コントロールの精度から完璧な仕上げに至るまで、すべての要素がさらなる探求と自動車の究極の贅沢を体験するように誘います。

中文:
帕加尼乌托邦是一部工程与艺术的交响曲，每一个细节都被精心打造至完美。其核心是一台源自梅赛德斯的V12发动机，这是一台提供令人惊叹性能的强大动力装置。内饰是一个美丽的圣殿，装饰有手工缝制的皮革和复杂的铝制装饰，营造出无与伦比的优雅氛围。碳钛等奢华材料贯穿于设计中，既保证了强度又轻盈如羽。每一个元素，从控制的精确度到无瑕的表面处理，都邀请您进一步探索并体验汽车奢华的巅峰。

KEY

English: Assembly Phase
Italiano: Fase di Assemblaggio
Deutsch: Montagephase
Français: Phase d' Assemblage
Español: Fase de Ensamblaje
日本語: 組立段階
中文: 组装阶段

1

English: Pay Attention
Italiano: Prestare Attenzione
Deutsch: Aufpassen
Français: Faire Attention
Español: Prestar Atención
日本語: 注意する
中文: 注意

English: Assembled Group
Italiano: Gruppo Assemblato
Deutsch: Zusammengefügte Gruppe
Français: Groupe Assemblé
Español: Grupo Ensamblado
日本語: 組み立てられたグループ
中文: 组装的组

A#1

English: Tube
Italiano: Tubo
Deutsch: Rohr
Français: Tube
Español: Tubo
日本語: チューブ
中文: 管

TU-1

English: Glue
Italiano: Colla
Deutsch: Kleber
Français: Colle
Español: Pegamento
日本語: 接着剤
中文: 胶水

English: Rotate
Italiano: Ruotare
Deutsch: Drehen
Français: Tourner
Español: Girar
日本語: 回転する
中文: 旋转

English: Part Number
Italiano: Numero di Parte
Deutsch: Teilenummer
Français: Numéro de Pièce
Español: Número de Parte
日本語: 部品番号
中文: 零件编号

Q-5

English: Assembly Order
Italiano: Ordine di Assemblaggio
Deutsch: Montageanweisung
Français: Ordre d' Assemblage
Español: Orden de Ensamblaje
日本語: 組立順序
中文: 组装顺序

1

English: Water Decal
Italiano: Decalcomania ad Acqua
Deutsch: Wasserschiebebild
Français: Décalcomanie à l' Eau
Español: Calcomanía de Agua
日本語: 水転写デカール
中文: 水贴

WD-1

English: Screw
Italiano: Vite
Deutsch: Schraube
Français: Vis
Español: Tornillo
日本語: ネジ
中文: 螺丝

A

English: Position part
Italiano: Parte della posizione
Deutsch: Positionsteil
Français: Partie de position
Español: Parte de la posición
日本語: 位置部分
中文: 位置部分

English: Assembled View
Italiano: Vista assemblata
Deutsch: Zusammengebaute Ansicht
Français: Vue assemblée
Español: Vista ensamblada
日本語: 組み立て図
中文: 装配视图

Some parts in XPS trays are positioned underneath others

Some screws in the build are for aesthetics, and are not functional

There are some duplicate parts which are not used in the build

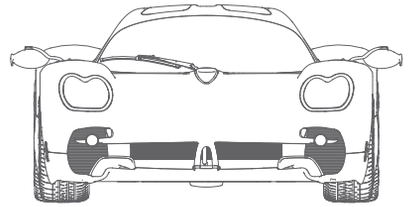

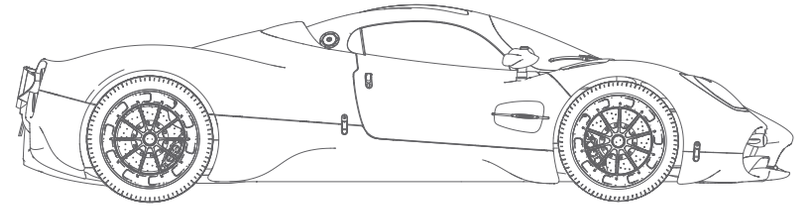

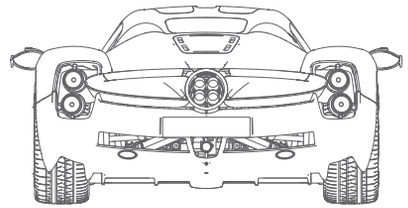

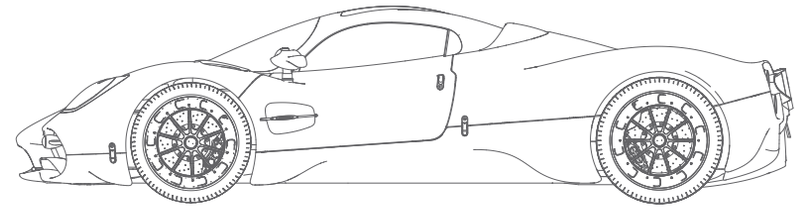

SCREW TYPES

A 1.5X7 PM HK-MSPP-M015-007-03	B 2.3X4 PB HK-TRSPP-M023-004-04	C 2.0x5 PM HK-MSPP-M020-005-04	D 2x4 PM HK-MSPP-M020-004-04	E 2.3X5PM HK-MSPP-M023-005-04	F 2.3x4 PM HK-MSPP-M023-004-04	G 1.5X4 PM HK-MSPP-M015-004-03
H 1.5X5 PB HK-TRSPP-M15-5-03	I 2.0X12 PM HK-MSPP-M020-012-04	J 1.5x11 PM HK-MSPP-M15-11-03	K 2.3X4 PWB HK-TRSPPW-M023-004-06	L 2.3X6 PB HK-TRSPP-M23-006-04	M 2.3x5 PWM HK-MSPPW-M023-005-06	N 1.5X5 PM HK-MSPP-M015-005-03
		O 2.0X4 KM HK-MSPC-M020-004-35	P 2.0X4 PB HK-TRSPP-M020-004-04	Q 1.2X4PB HK-TRSPP-M012-004-03		

Pocher

1

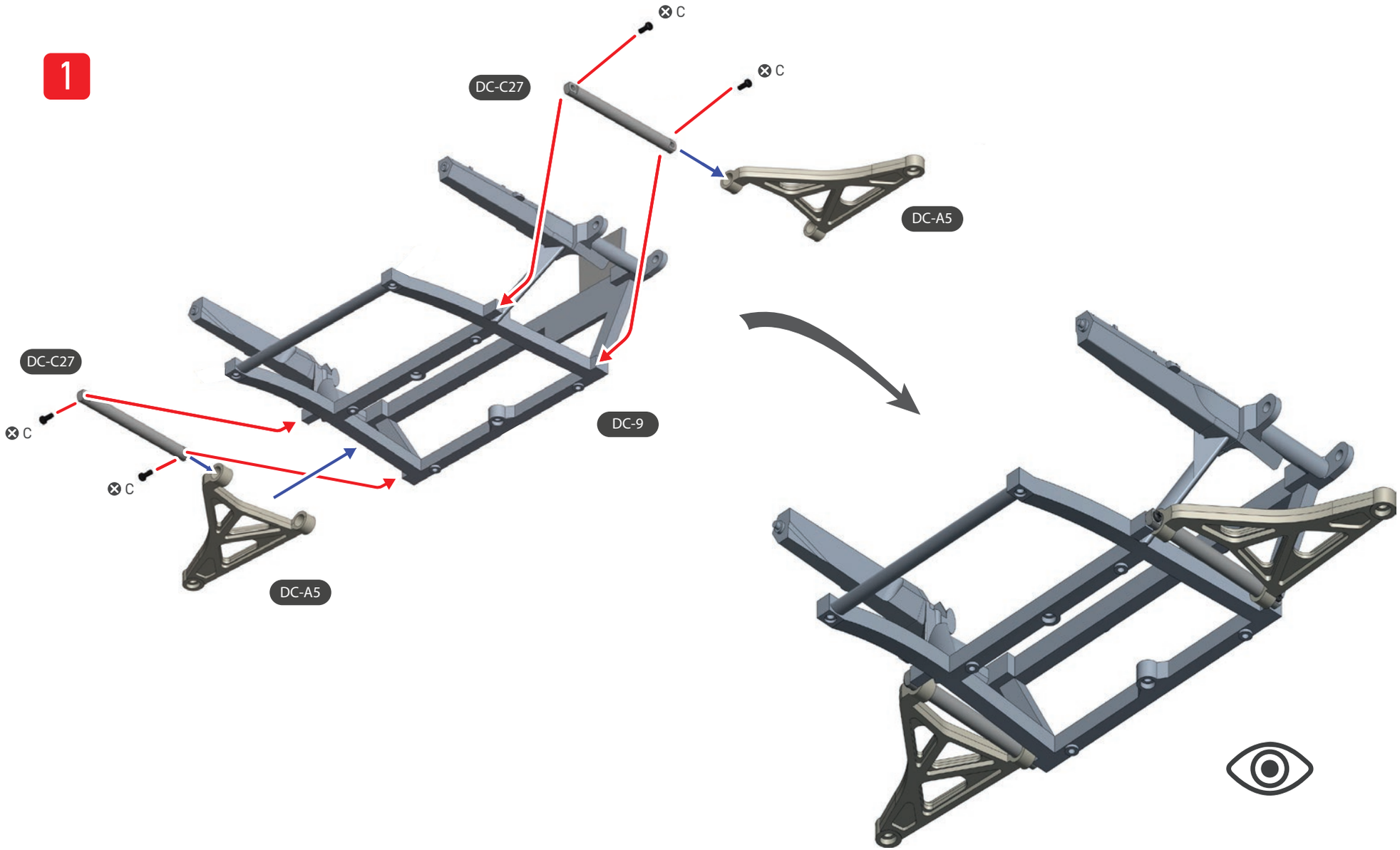

SCREW C = 4

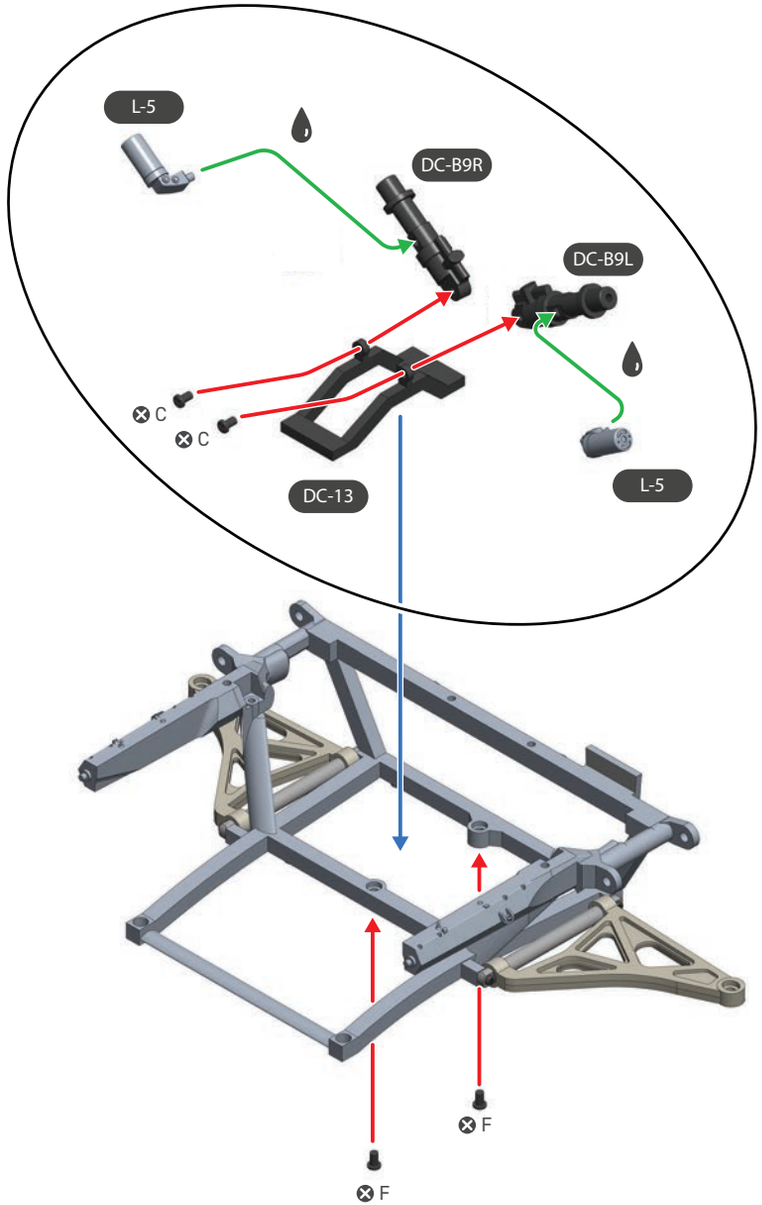

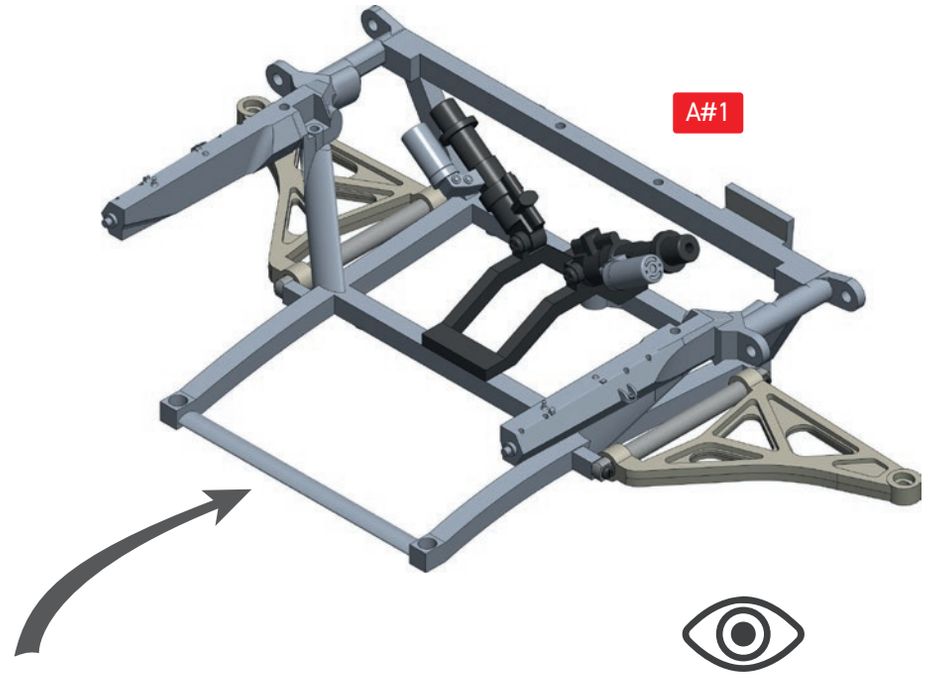

SCREW C = 2
SCREW F = 2

Pocher

A – screws here are used for visual effect, they are not structural.

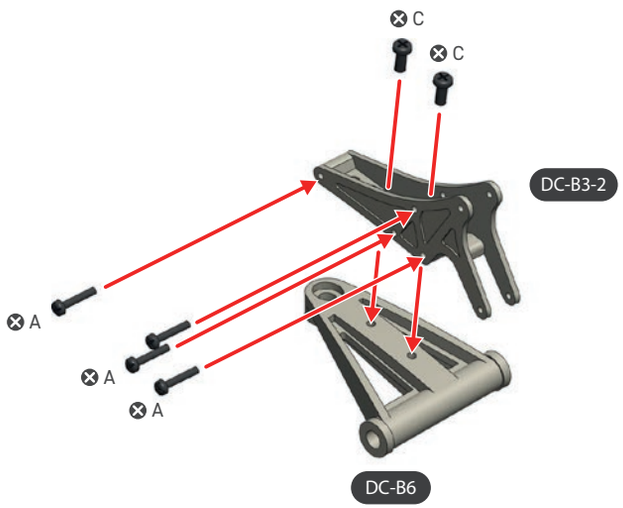

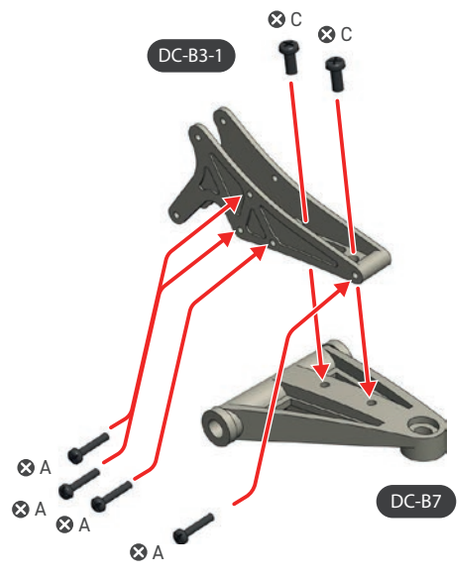

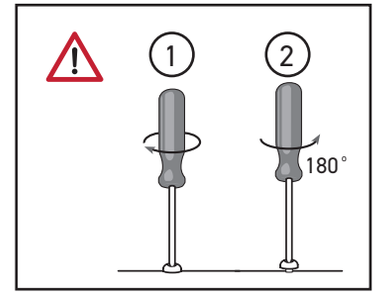

Carefully screw 360° and then unscrew 180° and repeate to remove metal swarf and reduce stress on screws

SCREW A = 8
SCREW C = 4

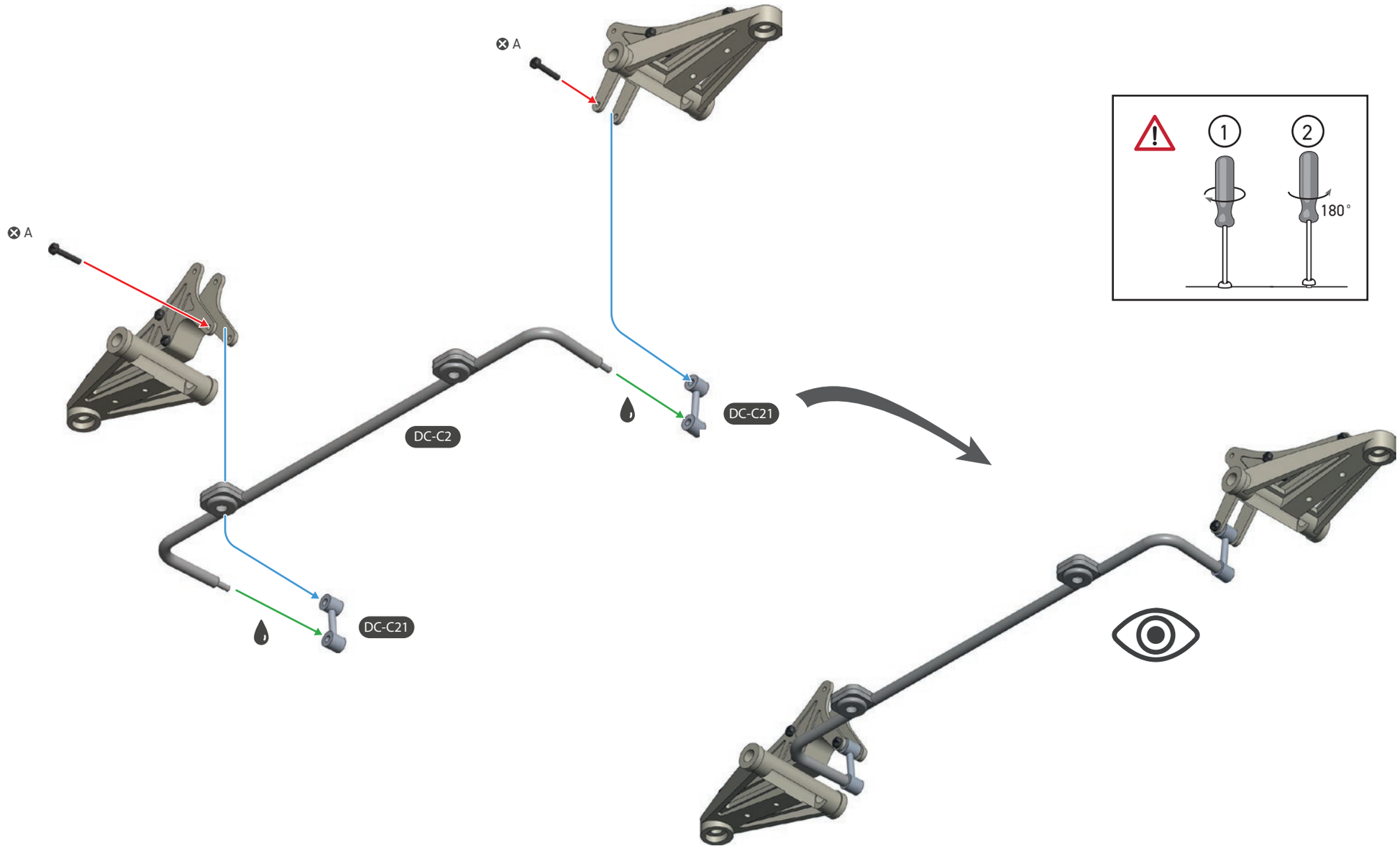

SCREW A = 2

Pocher

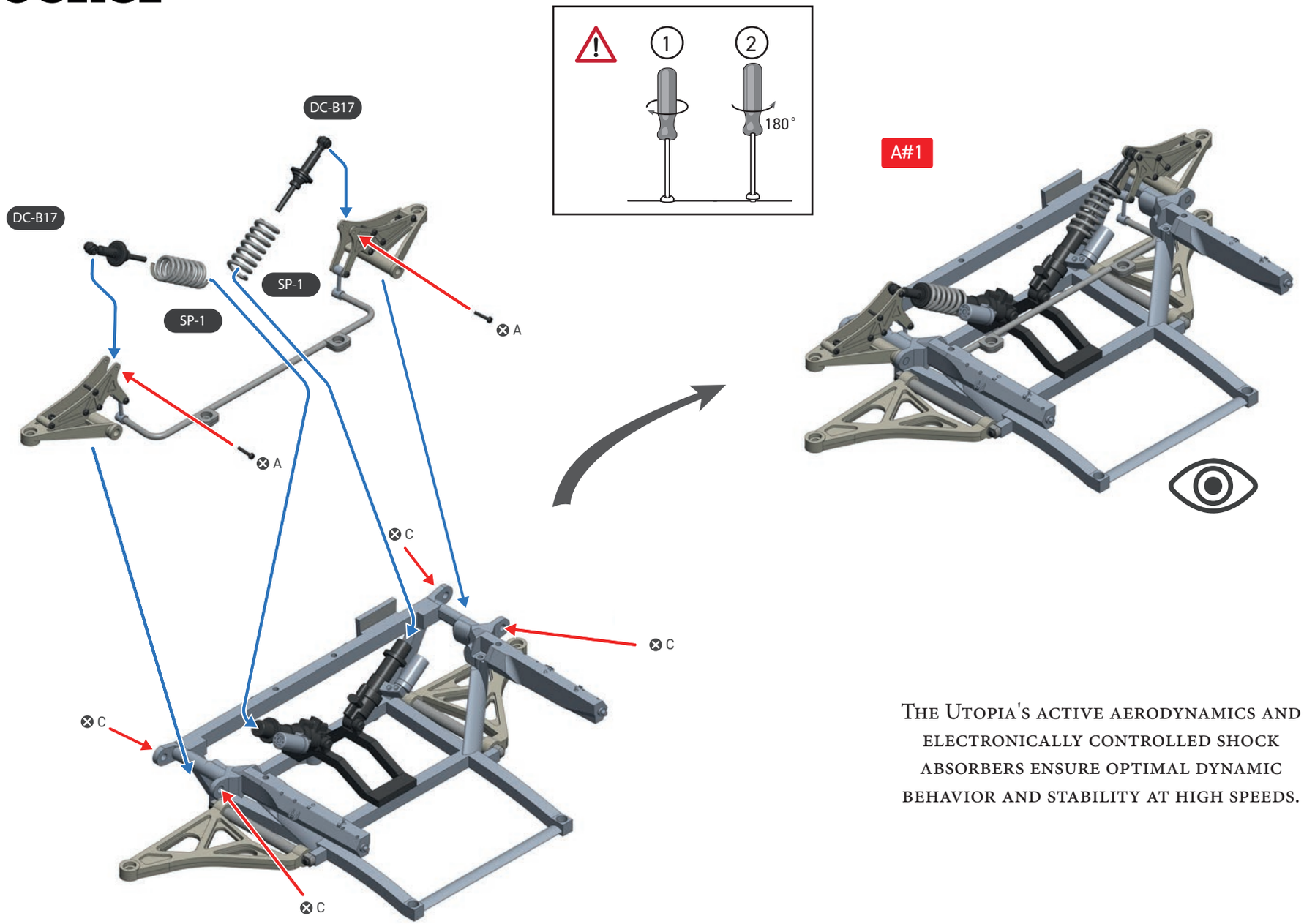

The Utopia's active aerodynamics and electronically controlled shock absorbers ensure optimal dynamic behavior and stability at high speeds.

SCREW A = 2
SCREW C = 4

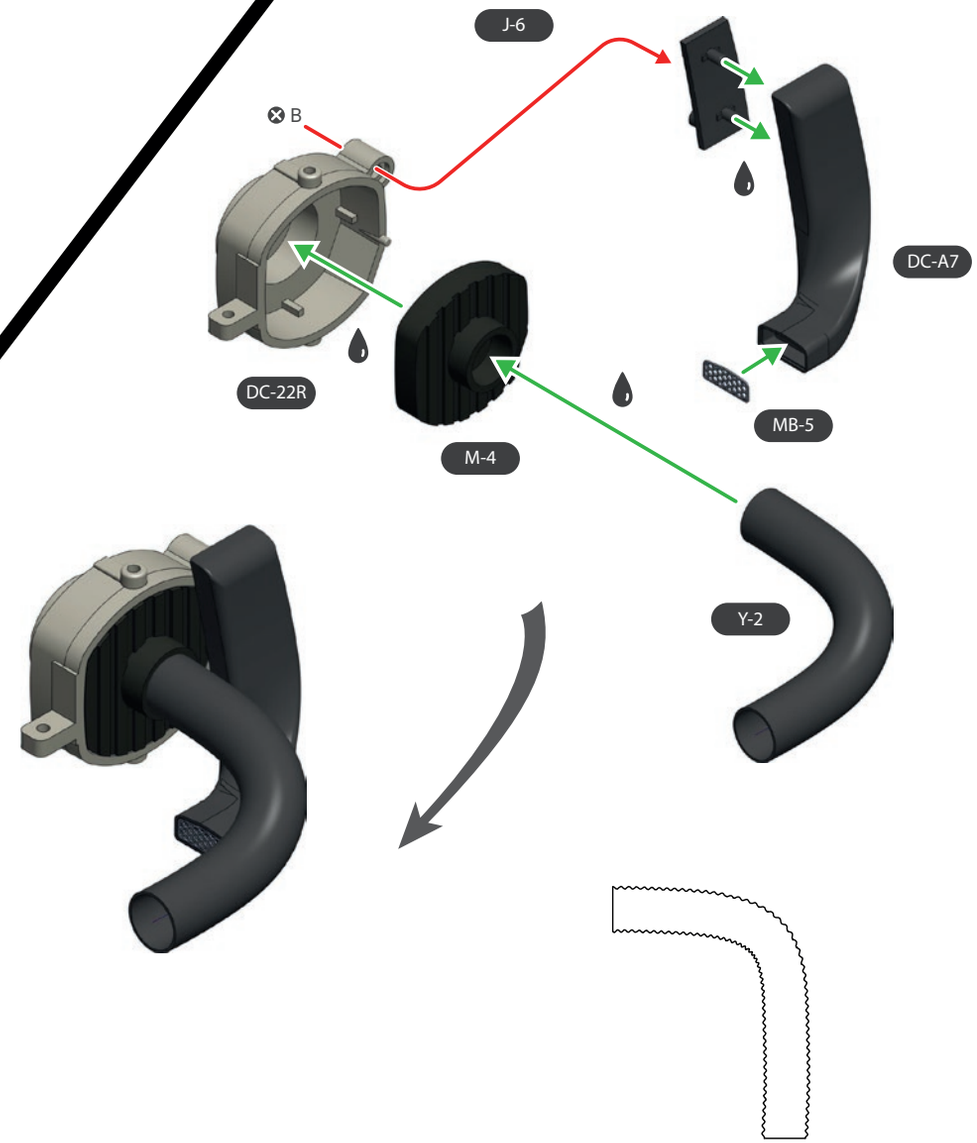

Short length of Y-1 and Y-2 secure to M-3 and M-4 respectively.

SCREW B = 2

Pocher

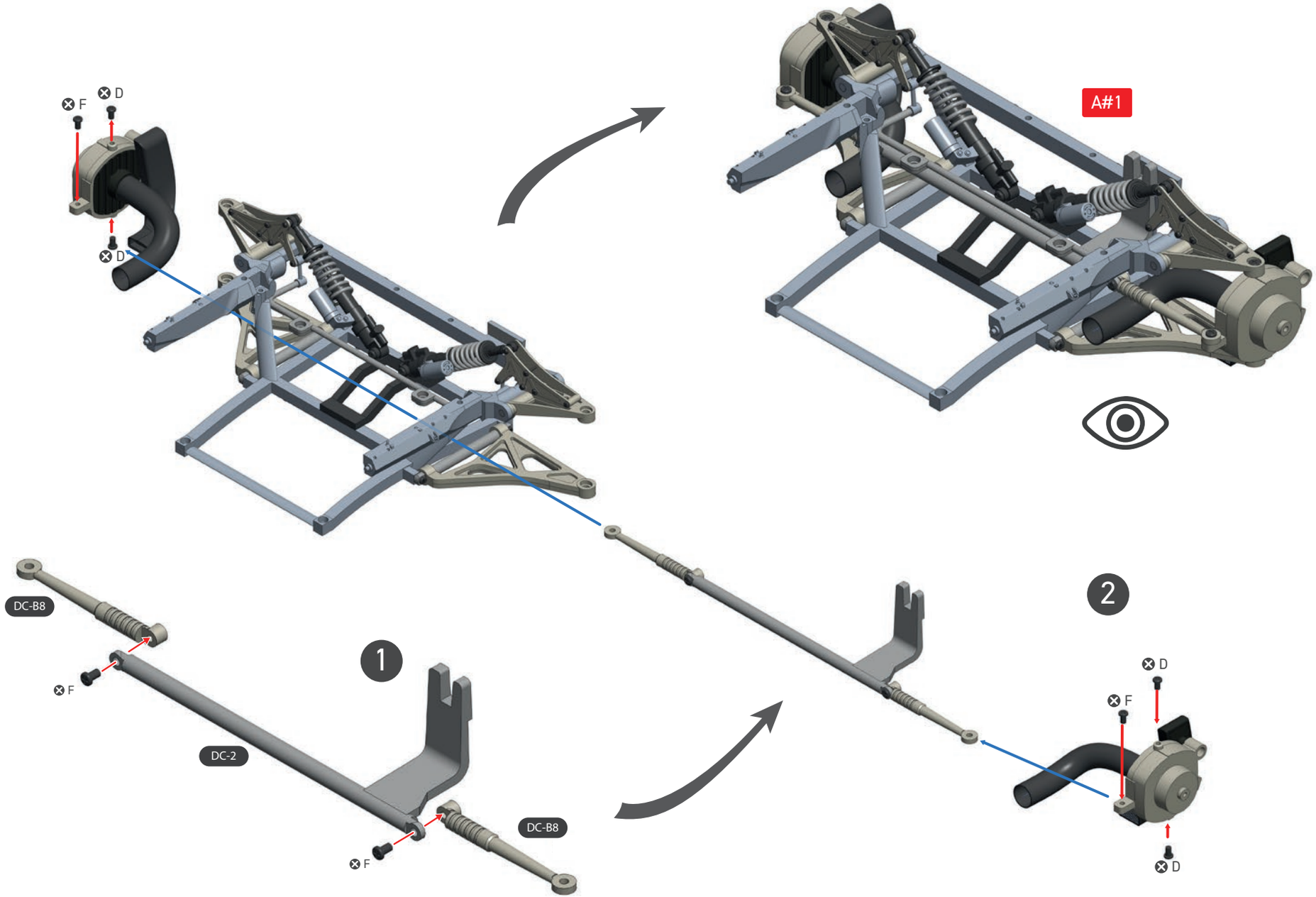

SCREW D = 4
SCREW F = 4

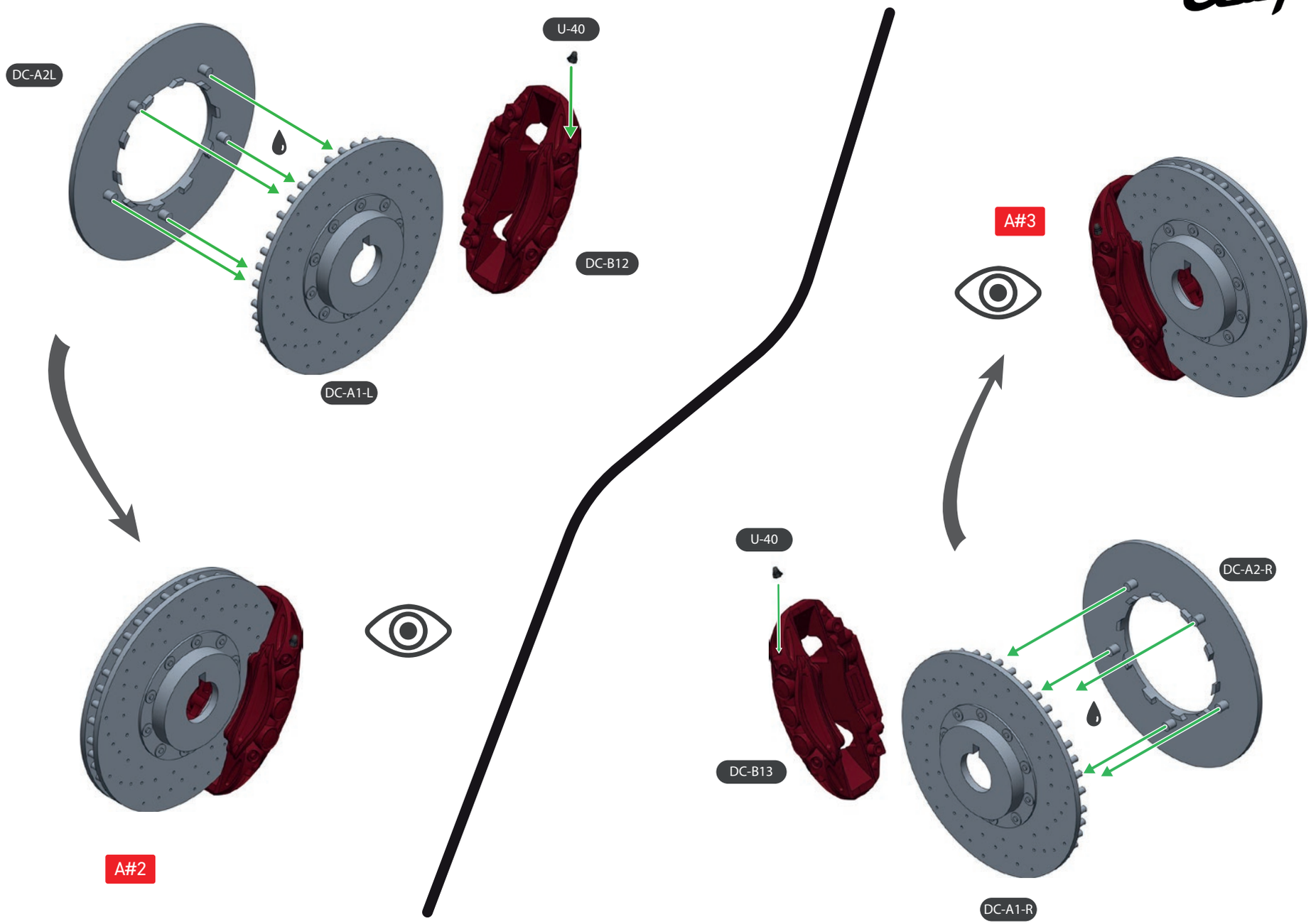
DC-A2L
U-40
DC-B12
DC-A1-L
A#2
A#3
U-40
DC-A2-R
DC-B13
DC-A1-R

Pocher

Pagani by Brembo 4 ventilated carbon-ceramic disk brake unit, 410x38 mm with 6 piston monolithic calipers at the front and 390x34 mm with 4 piston monolithic calipers at the rear.

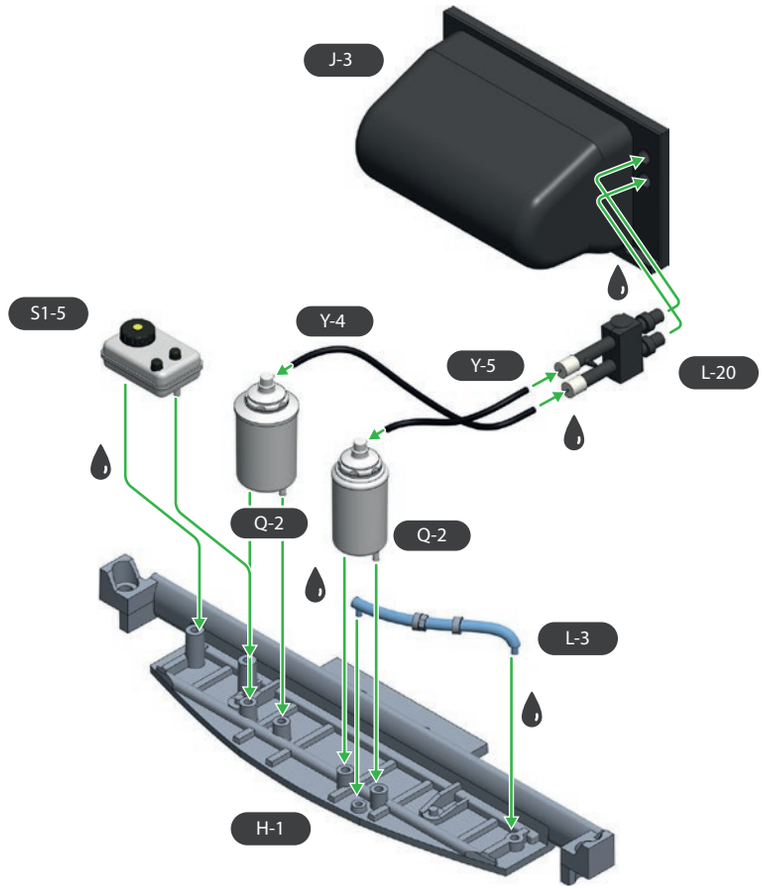

A#4

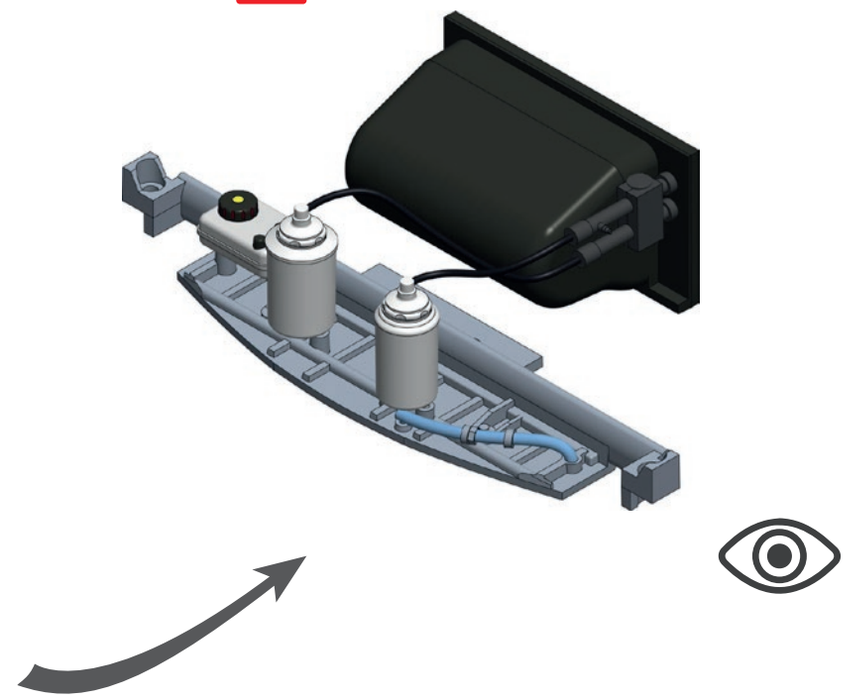

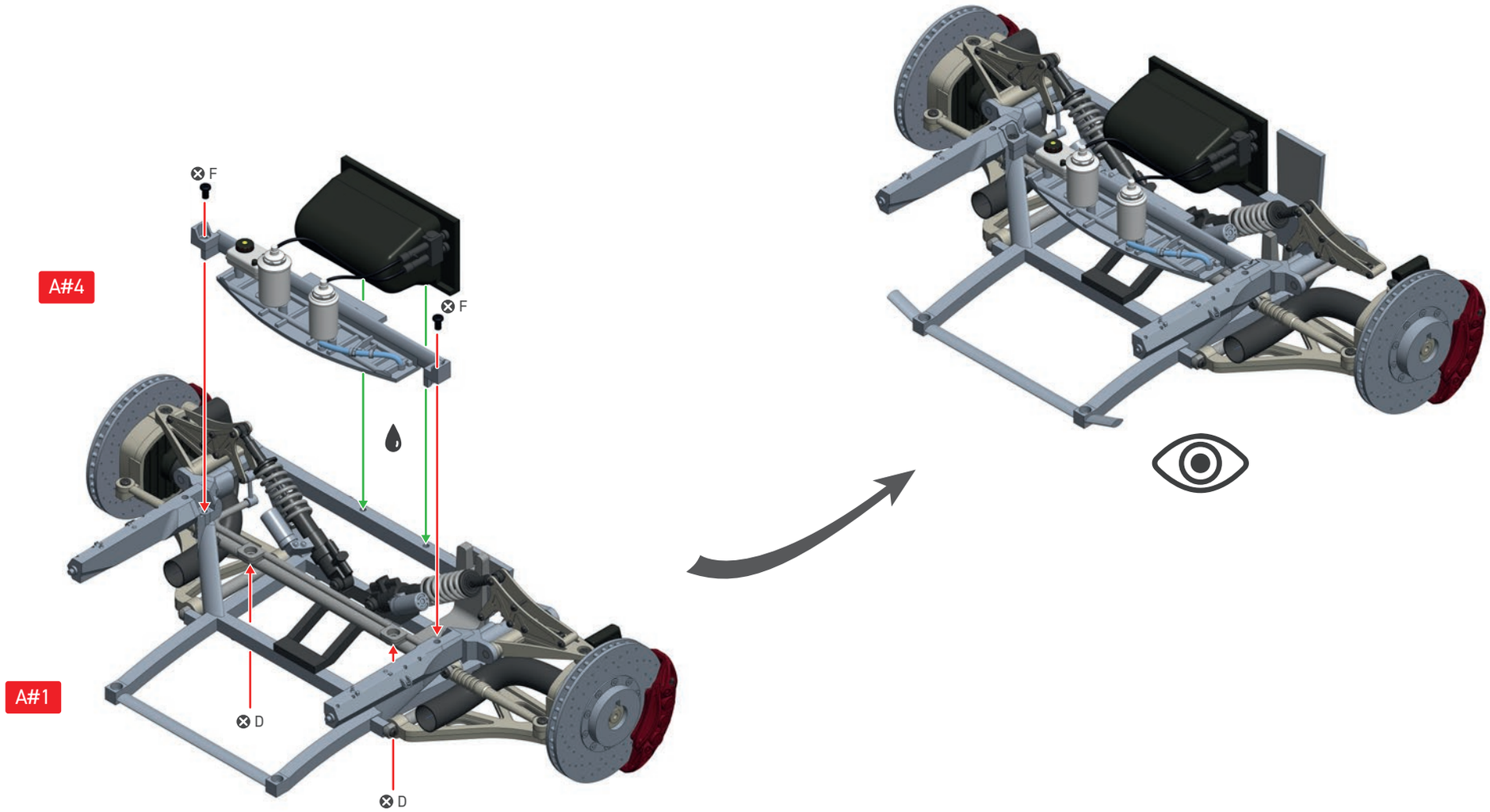

SCREW D = 2
SCREW F = 2

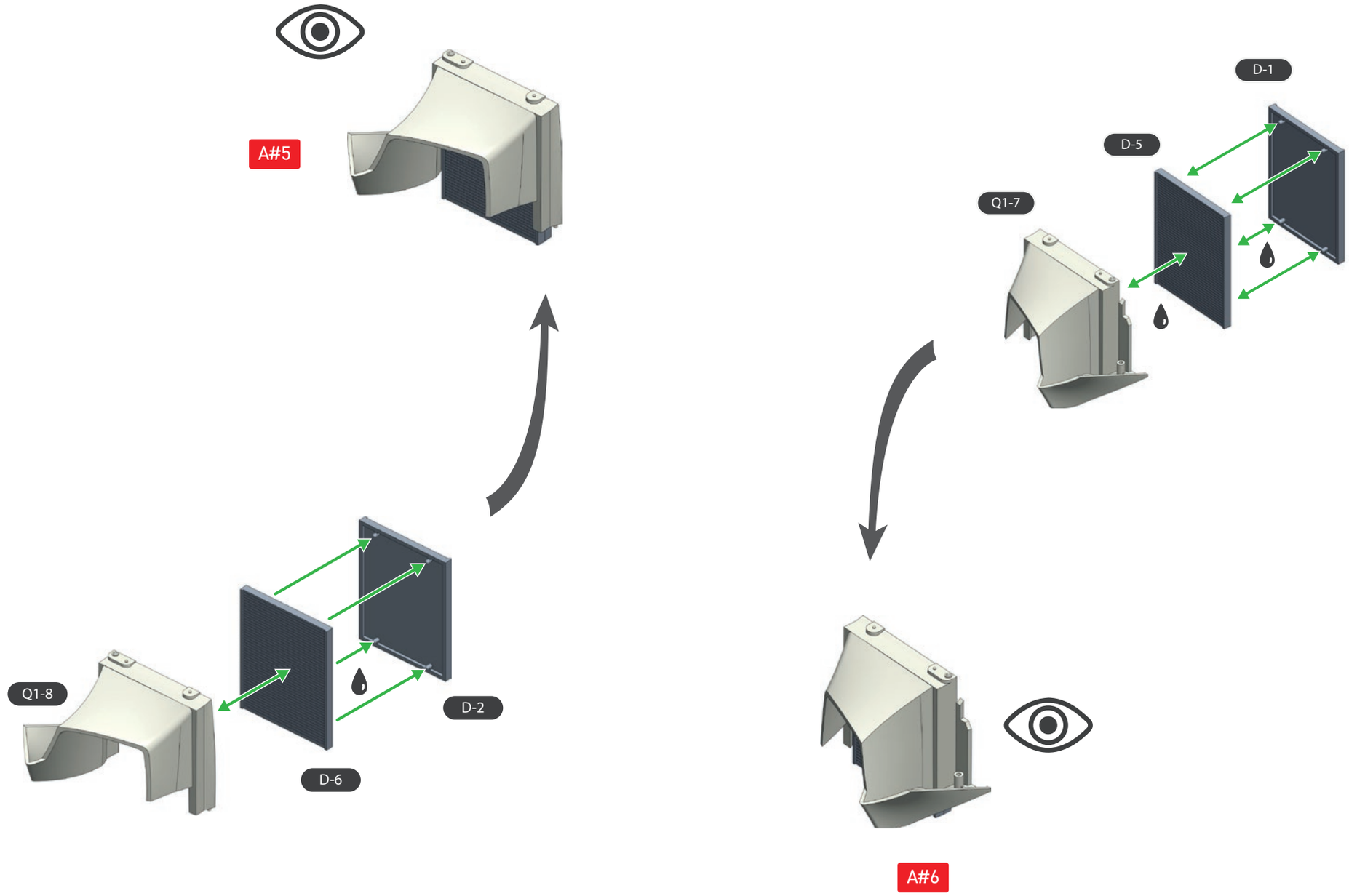
A#5
D-1
D-5
Q1-7
Q1-8
D-2
D-6
A#6

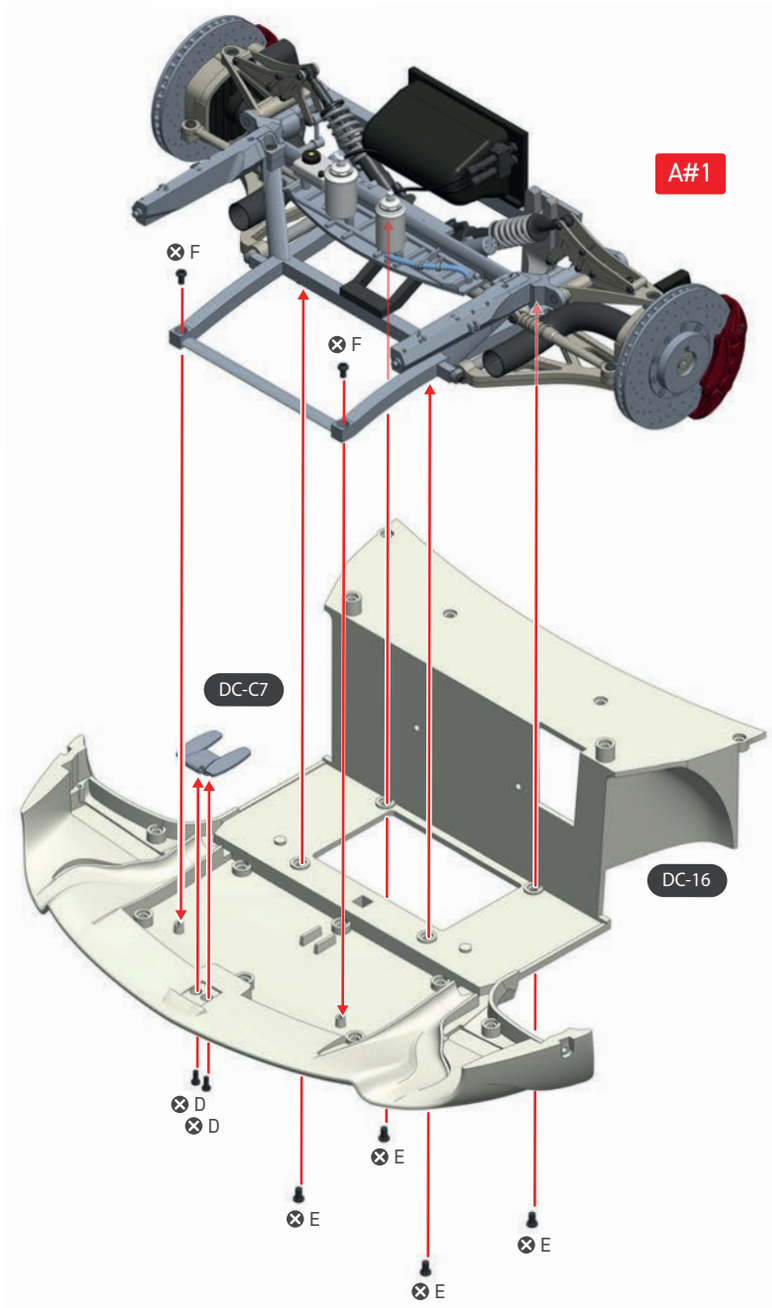

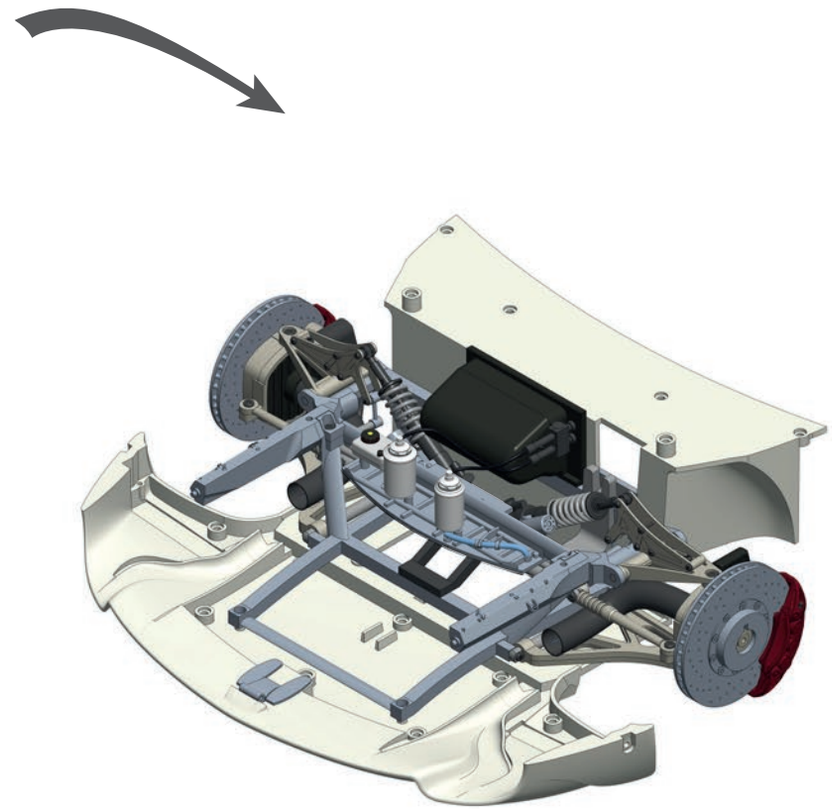

SCREW D = 2
SCREW E = 4
SCREW F = 2

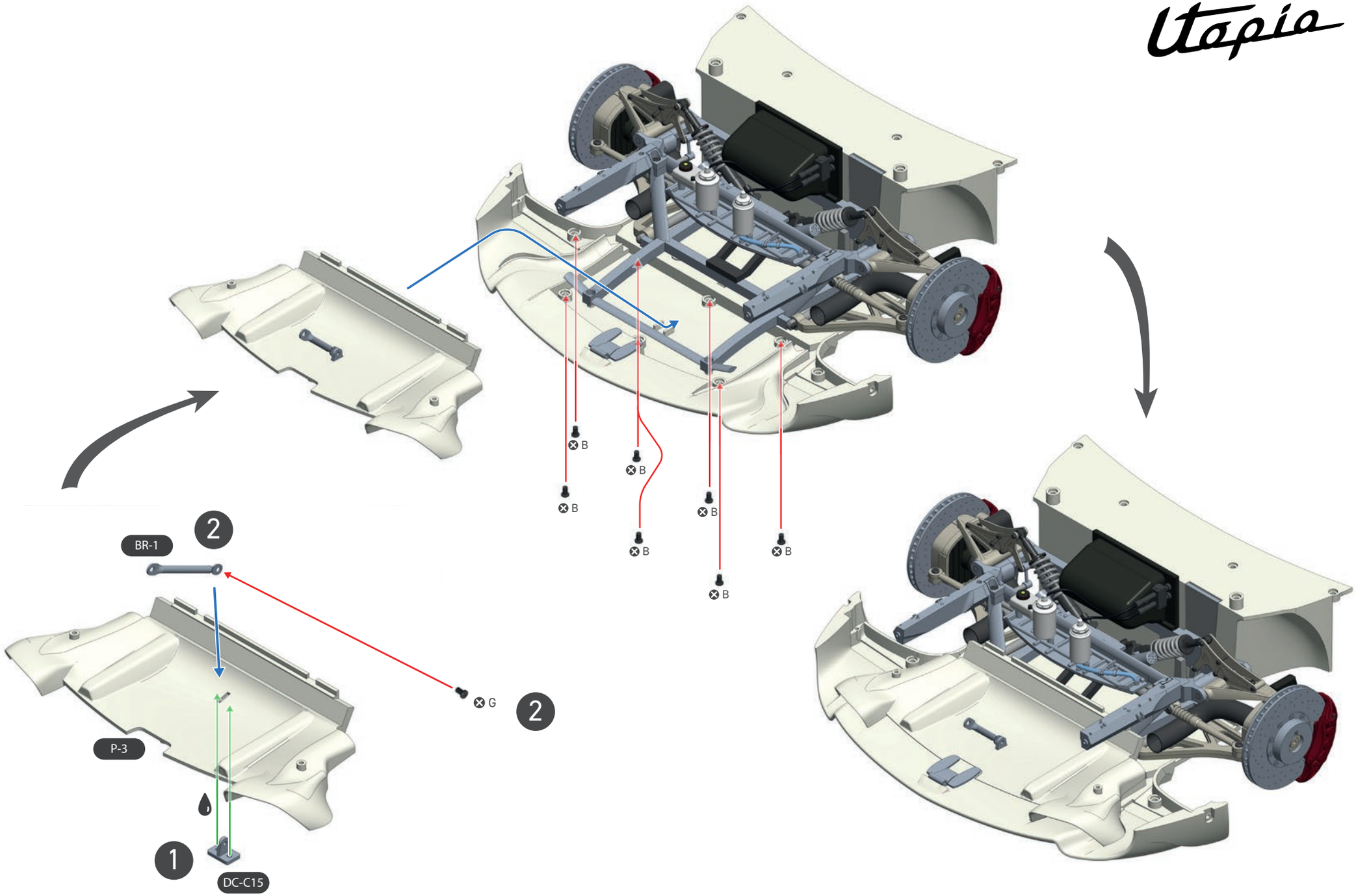

SCREW B = 6
SCREW G = 1

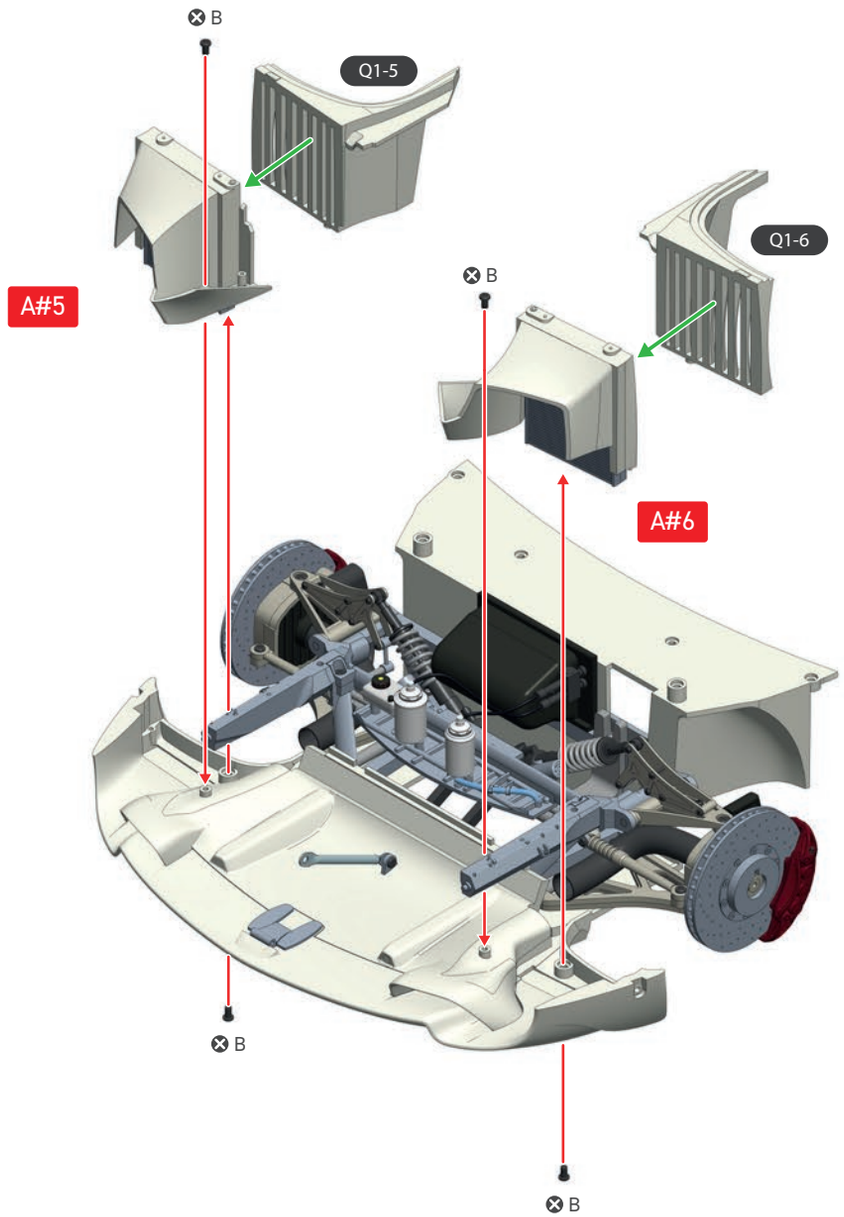

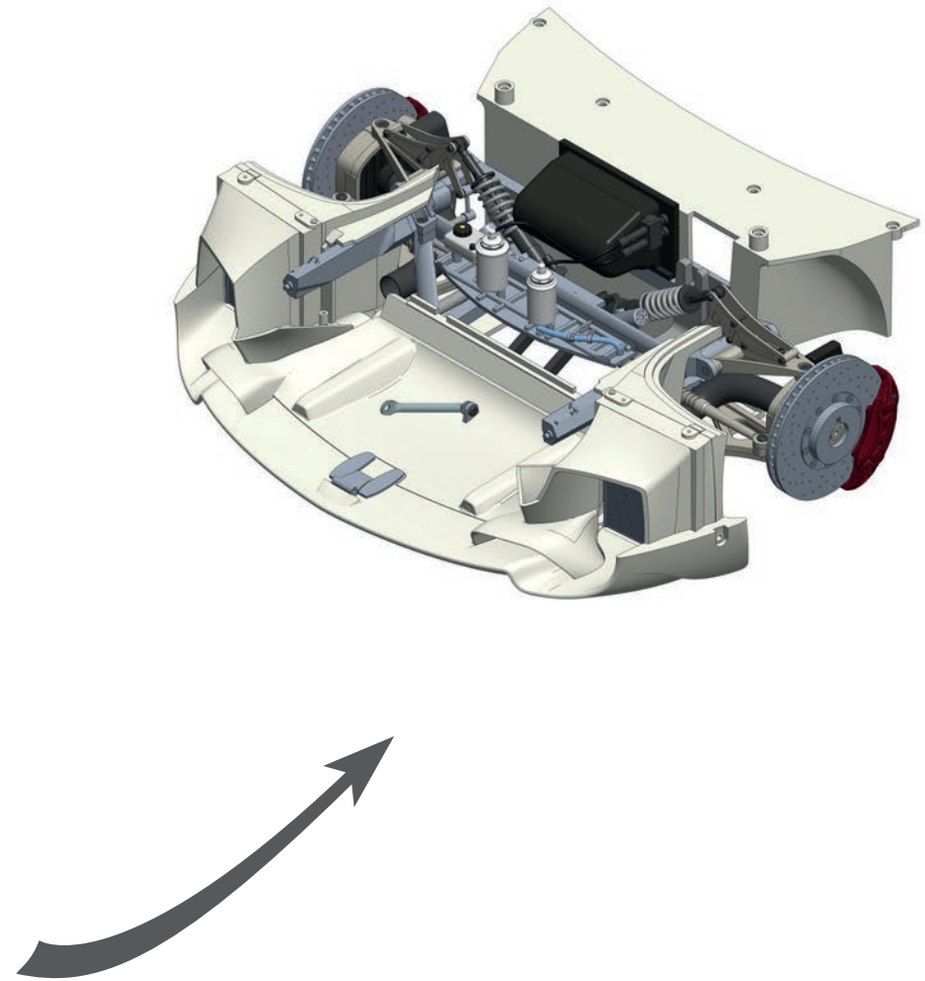

SCREW B=4

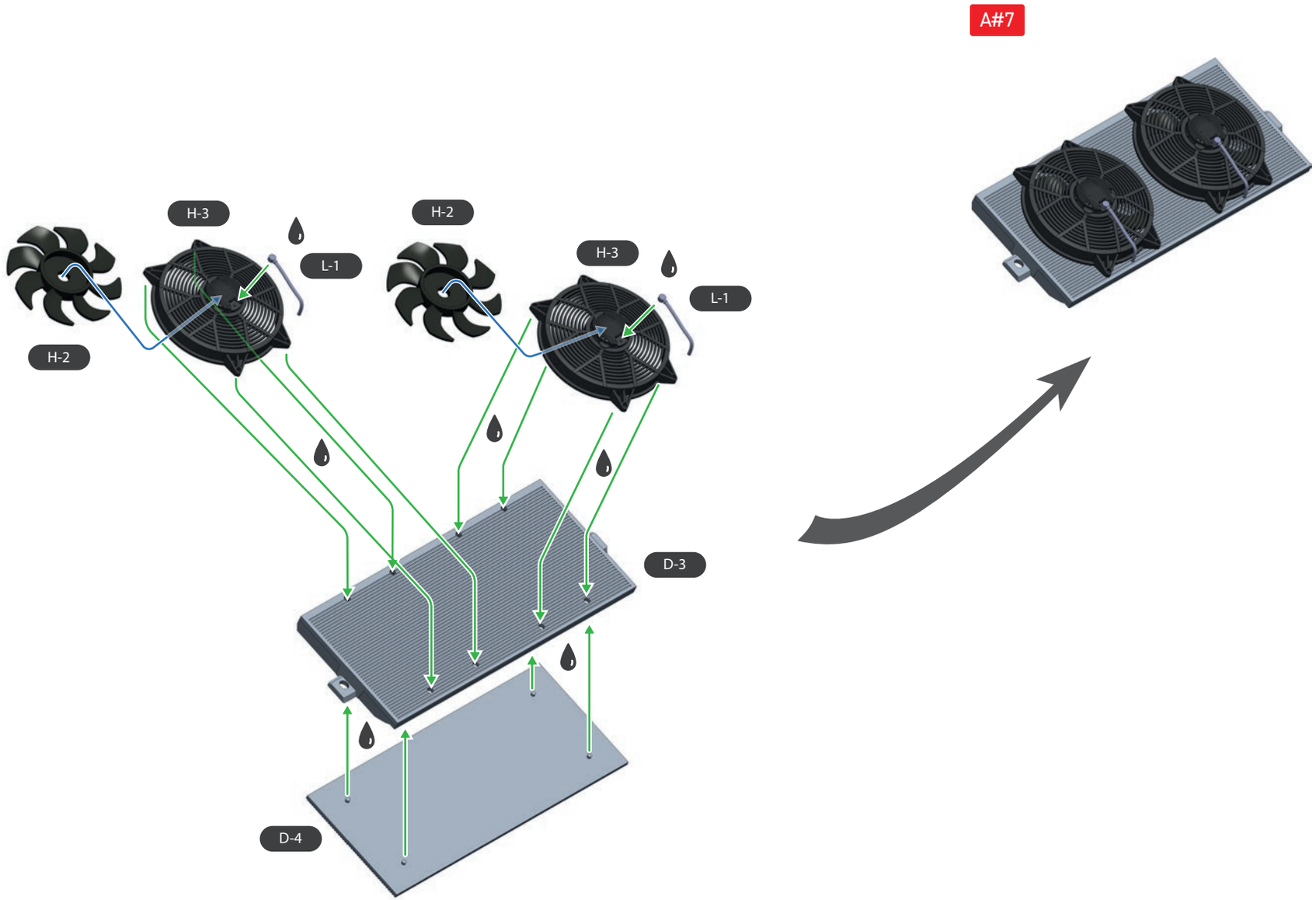
A#7
H-3
H-2
L-1
H-2
H-3
L-1
D-3
D-4

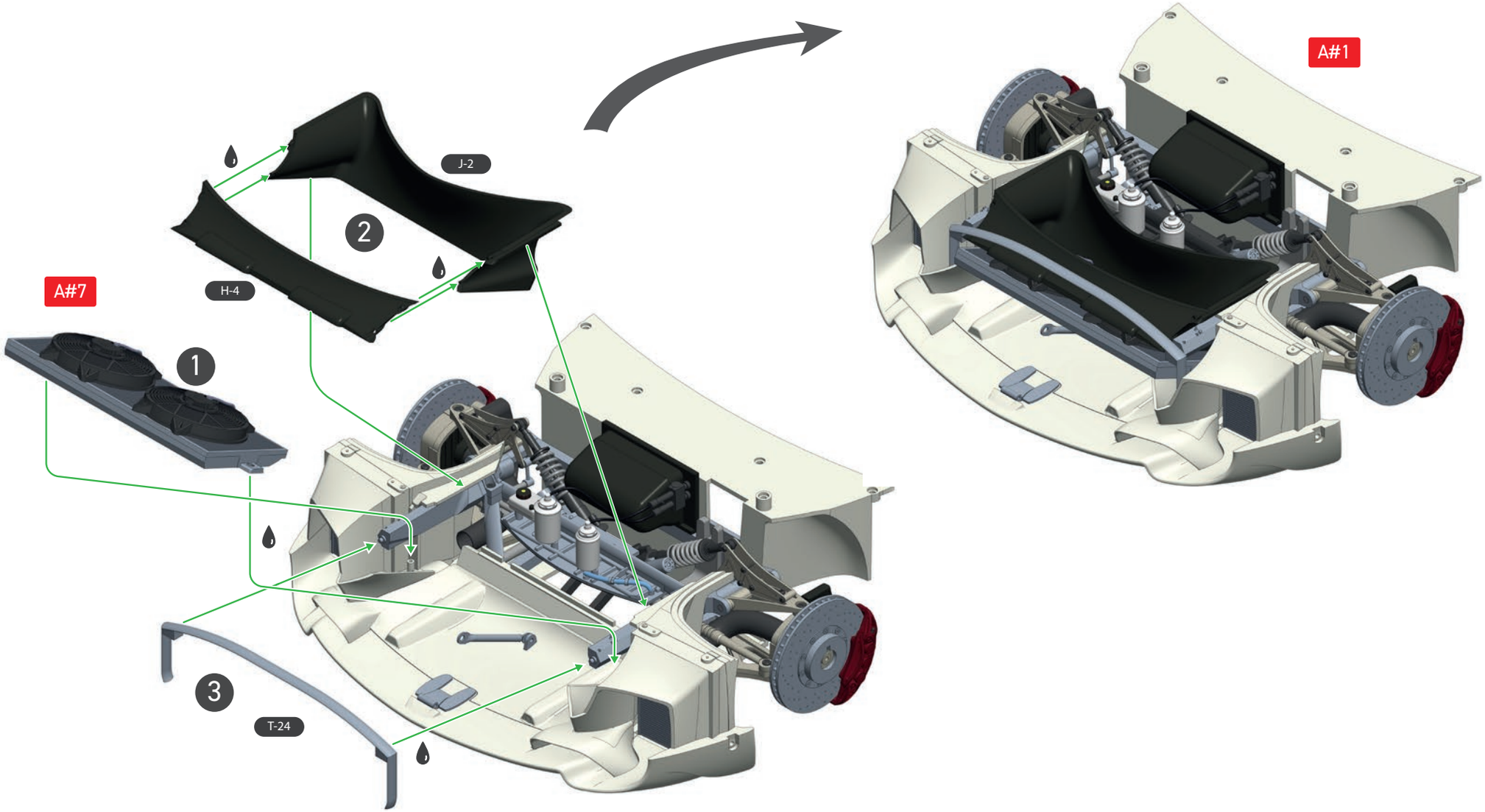
A#1
J-2
2
H-4
A#7
1
3
T-24

2

Monocoque built in sophisticated Pagani Carbo-Titanium HP62 G2 and Carbo-Triax HP62. leveraging both the tensile strength of titanium and the lightweight properties of carbon fiber, ensures optimal structural performance and enhances the vehicle's dynamic handling capabilities.

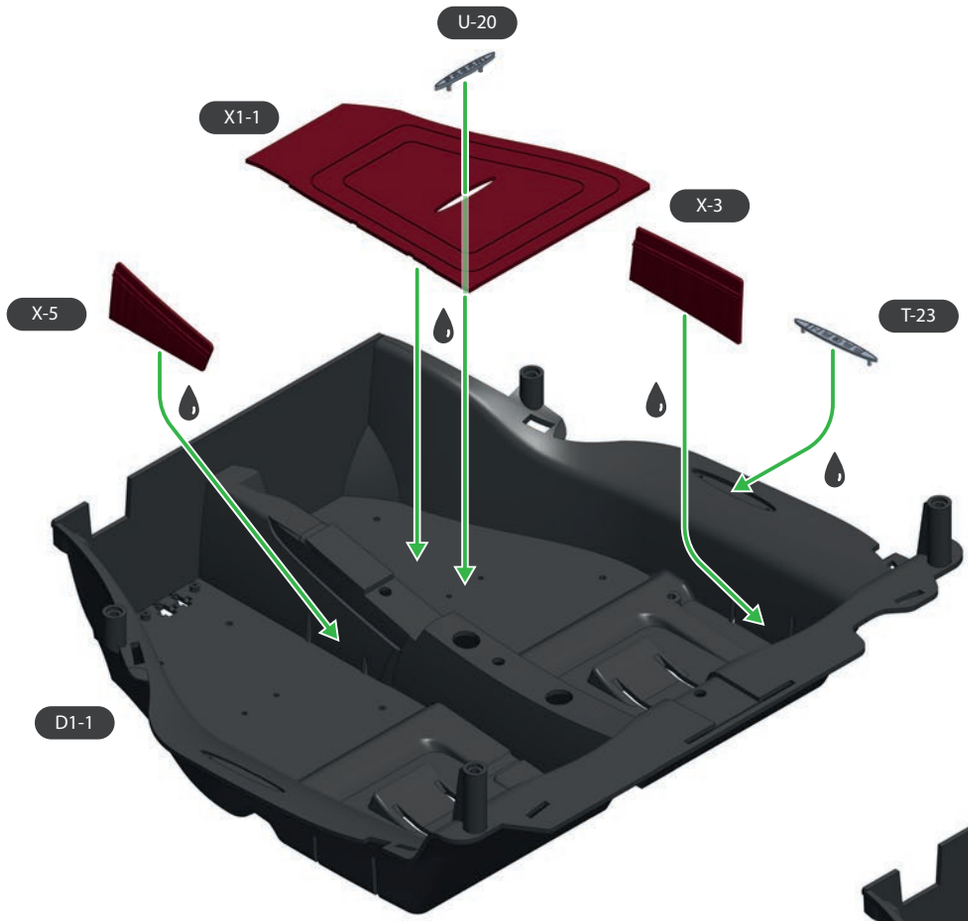

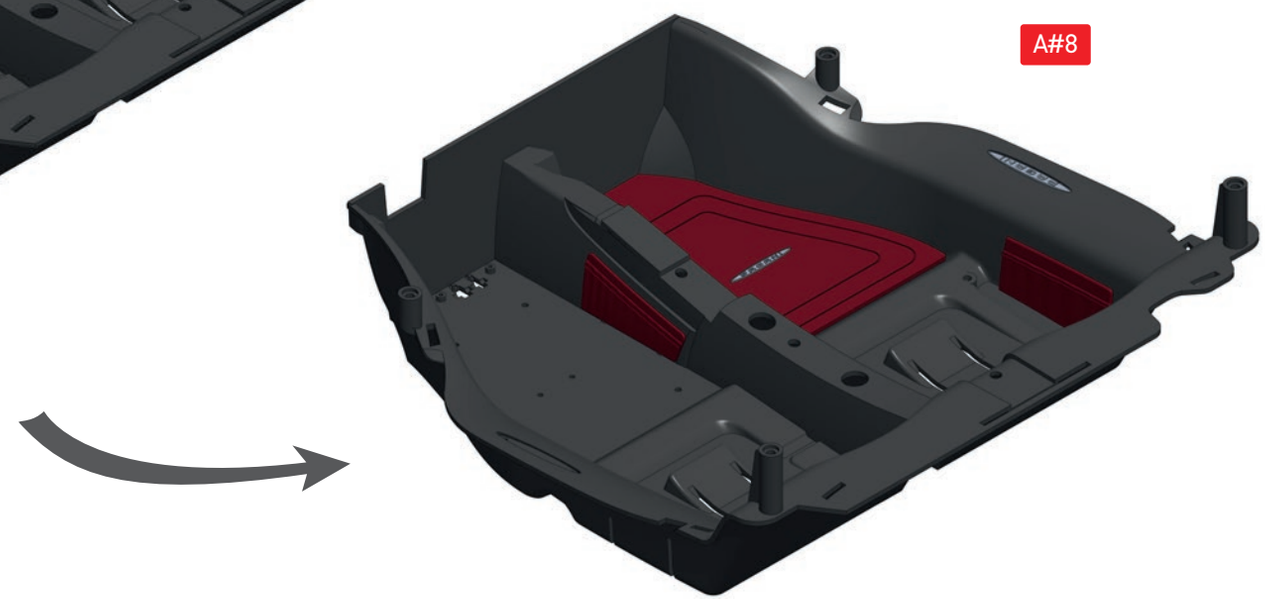

Pocher

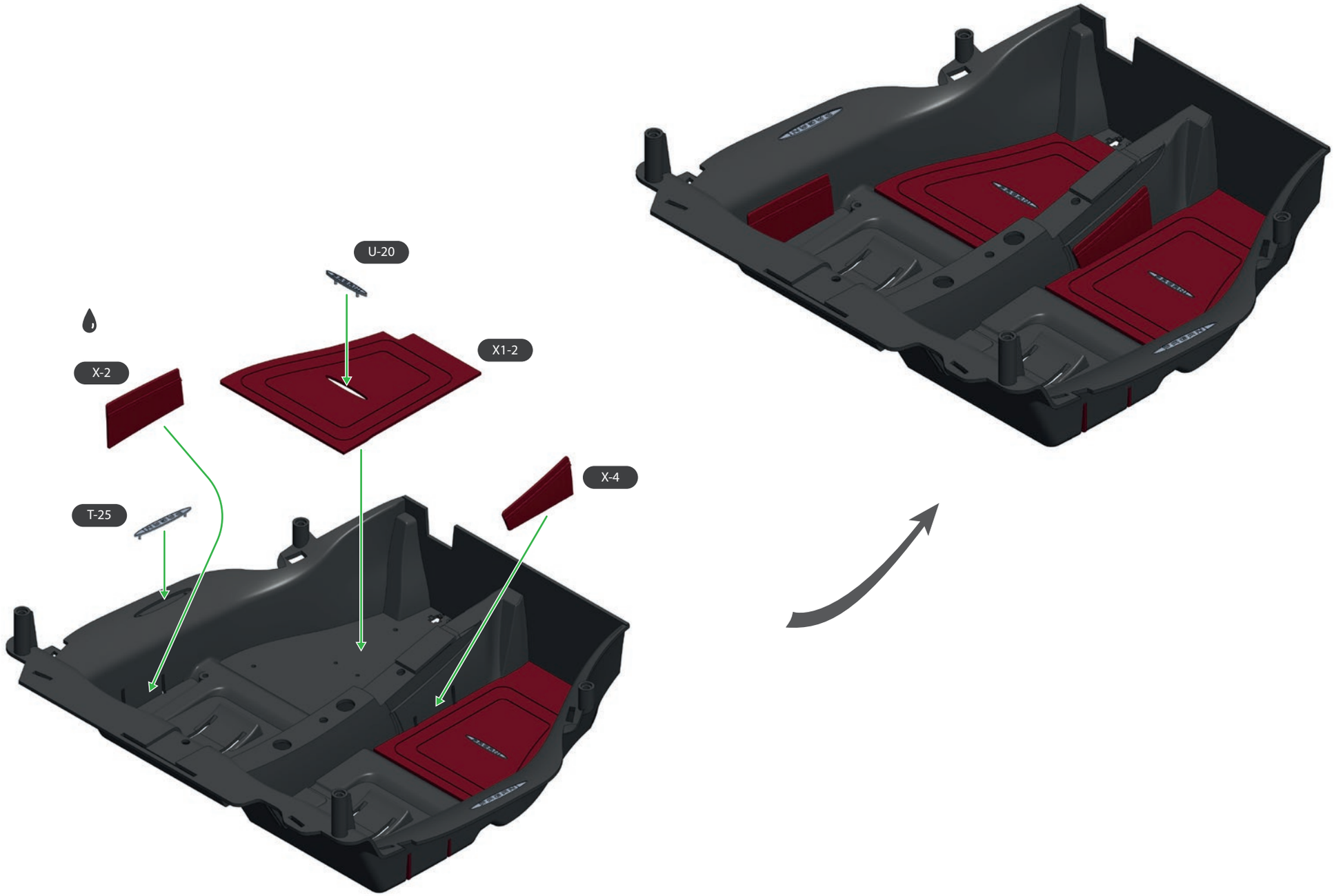

A#9

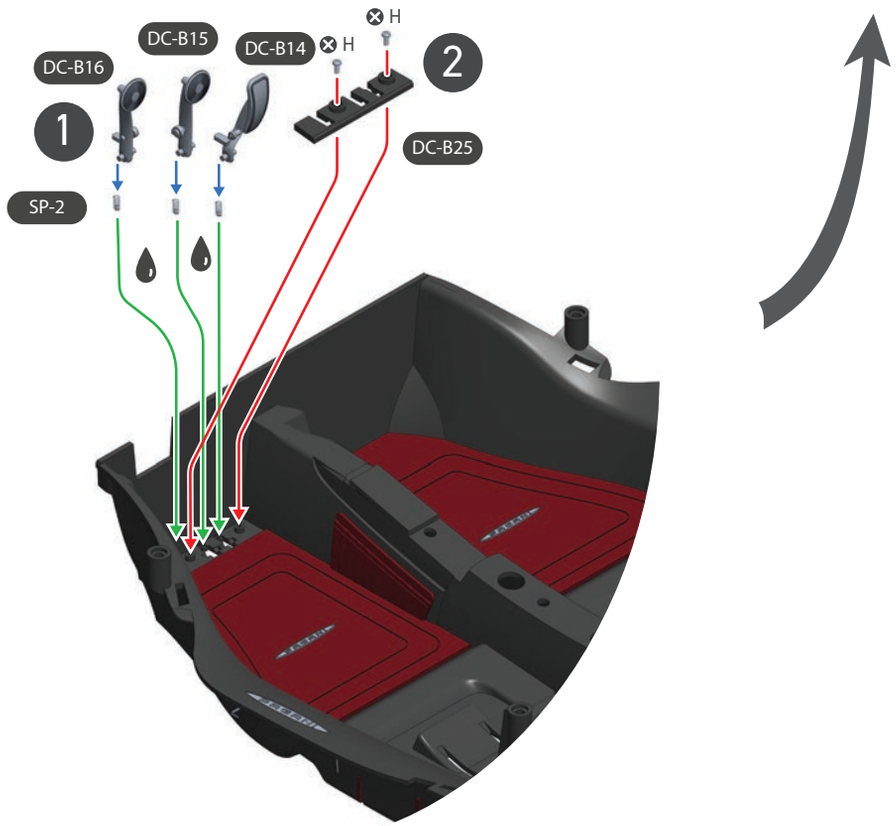

The finely detailed pedals are milled from a single block of metal.

SCREW H = 2

Pocher

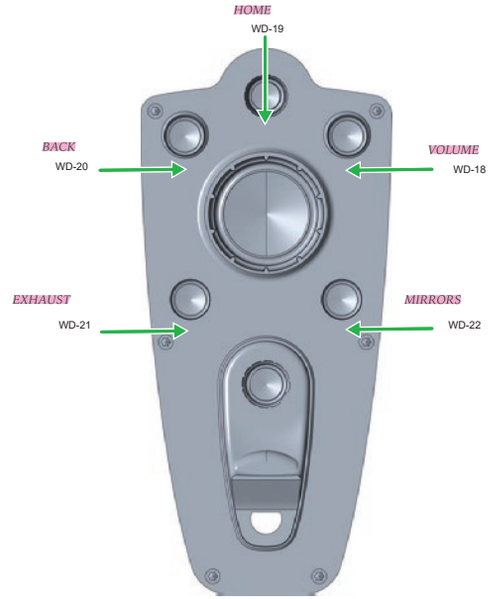

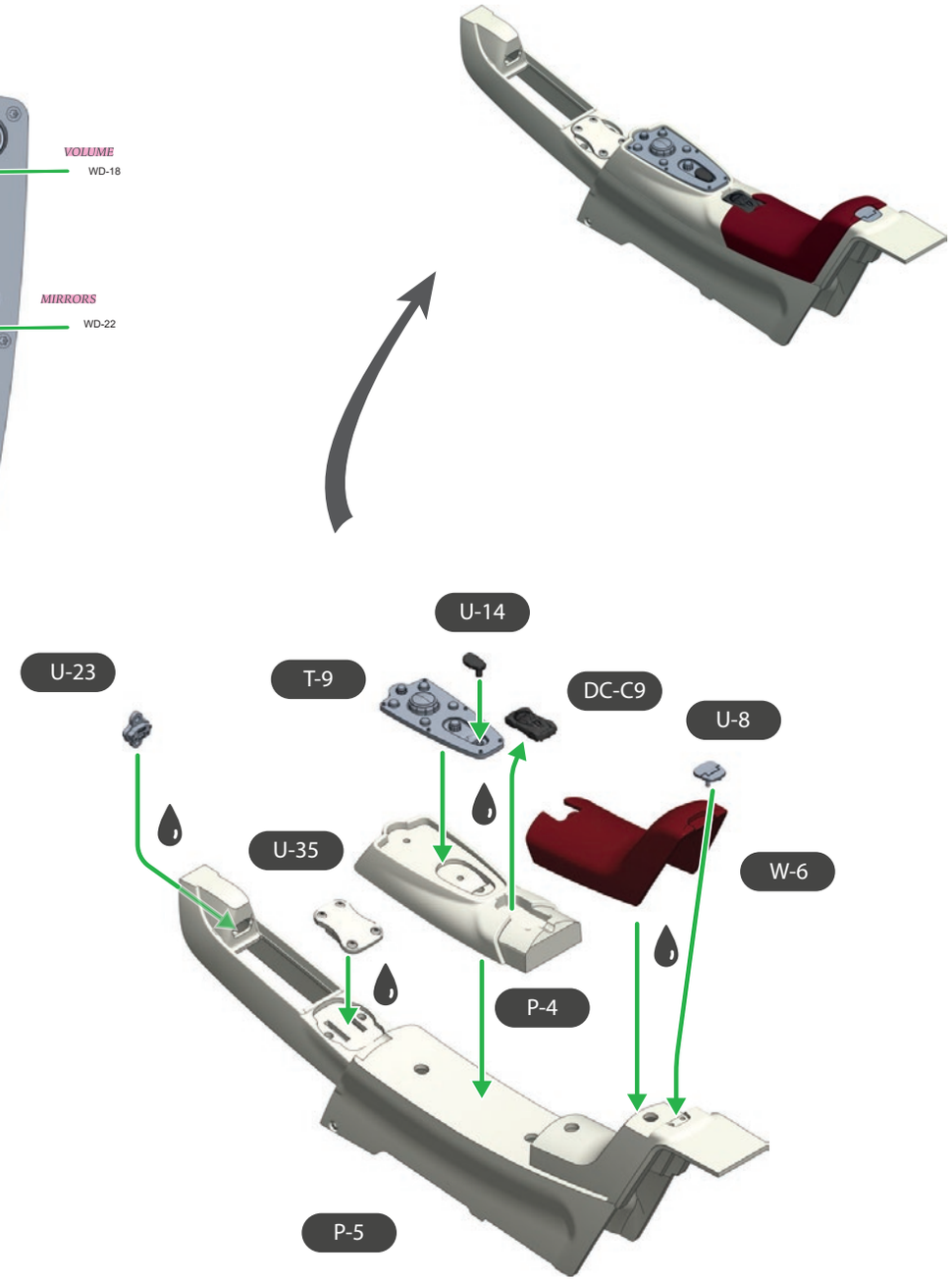

There are two DC-C9 supplied, only one is used in the build.

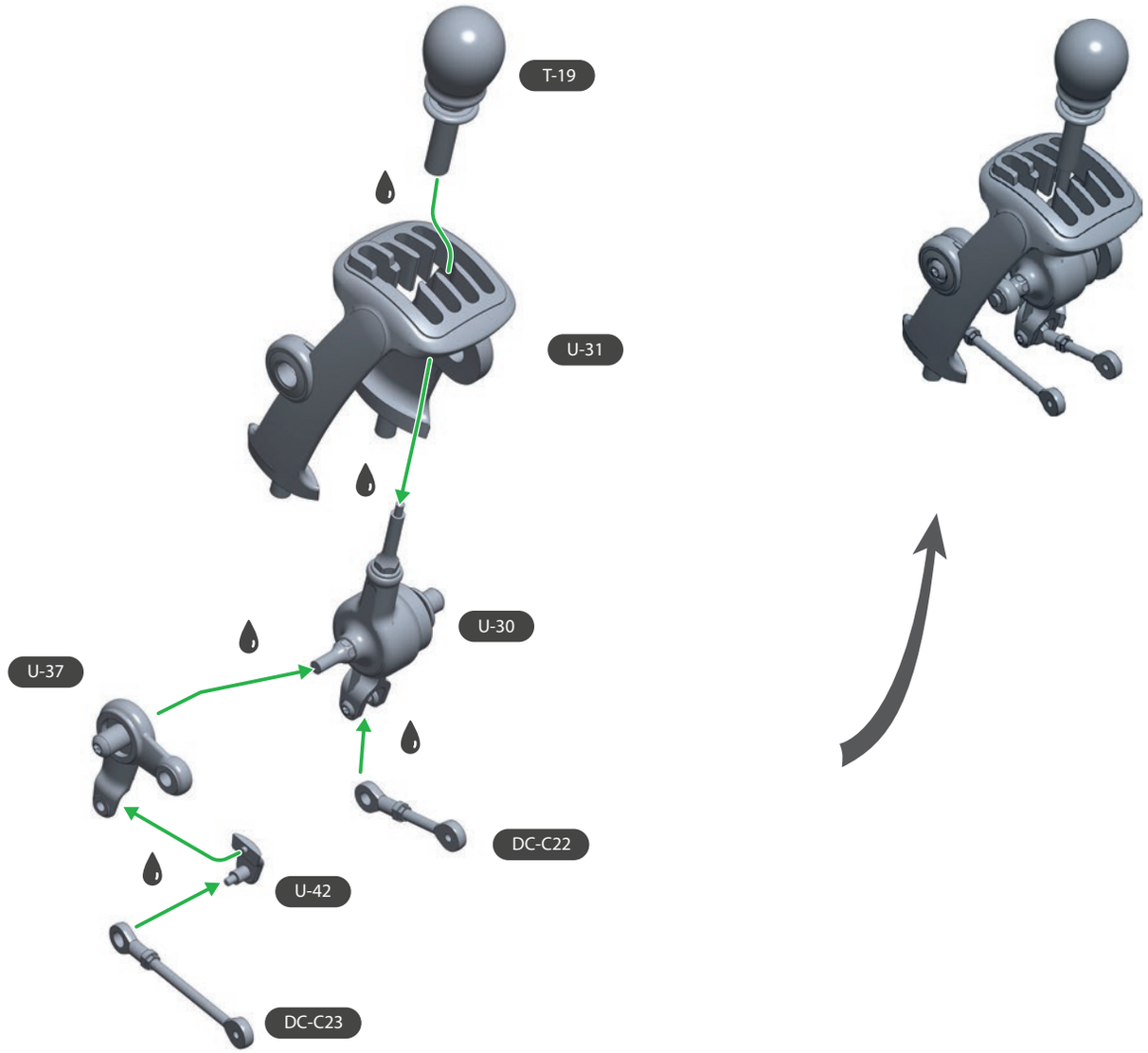

Pagani Utopia uses the Xtrac 7-speed Transversal AMT(Automated manual transmission) or pure manual, with electro-mechanical differential.

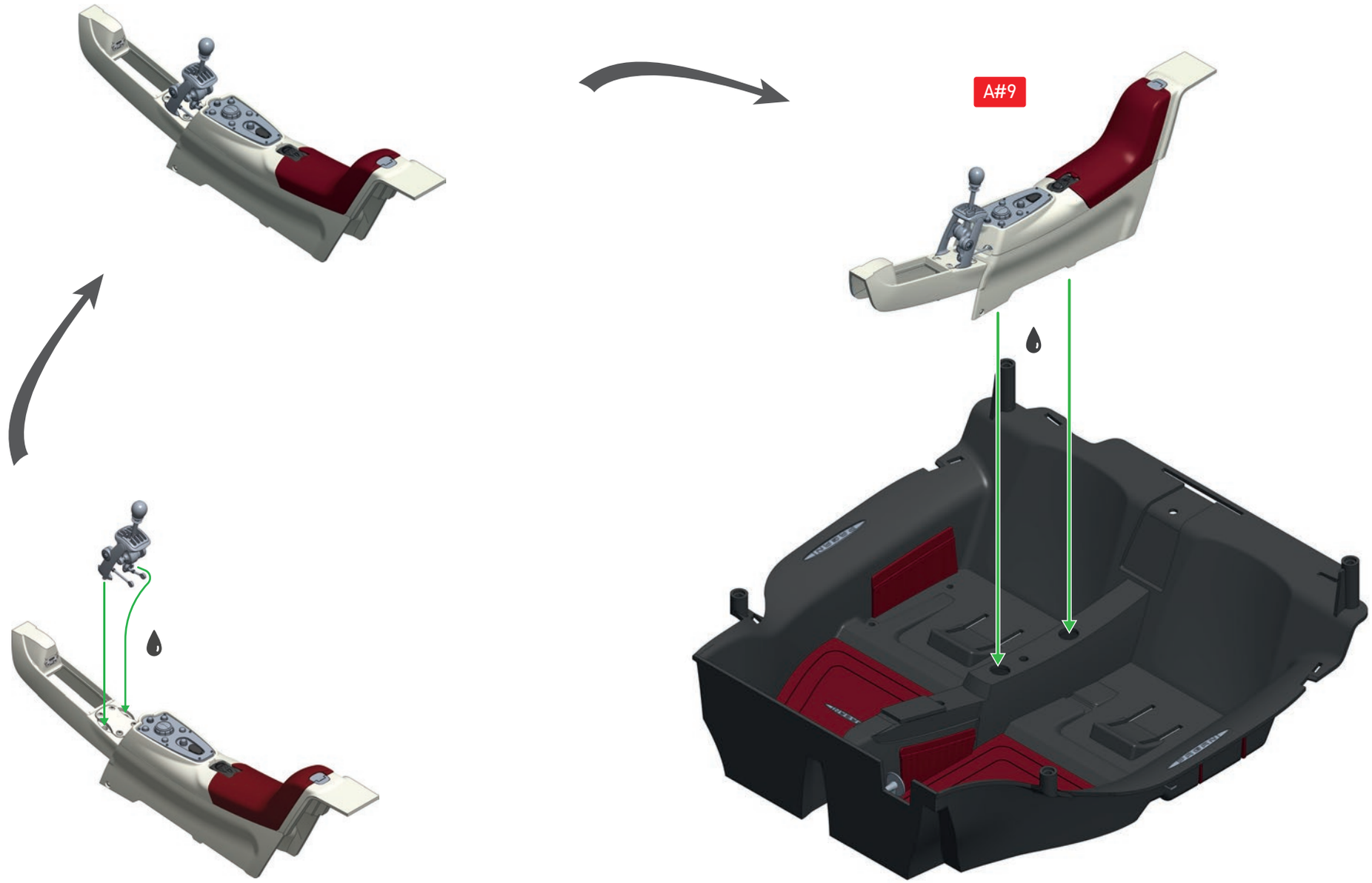
A#9

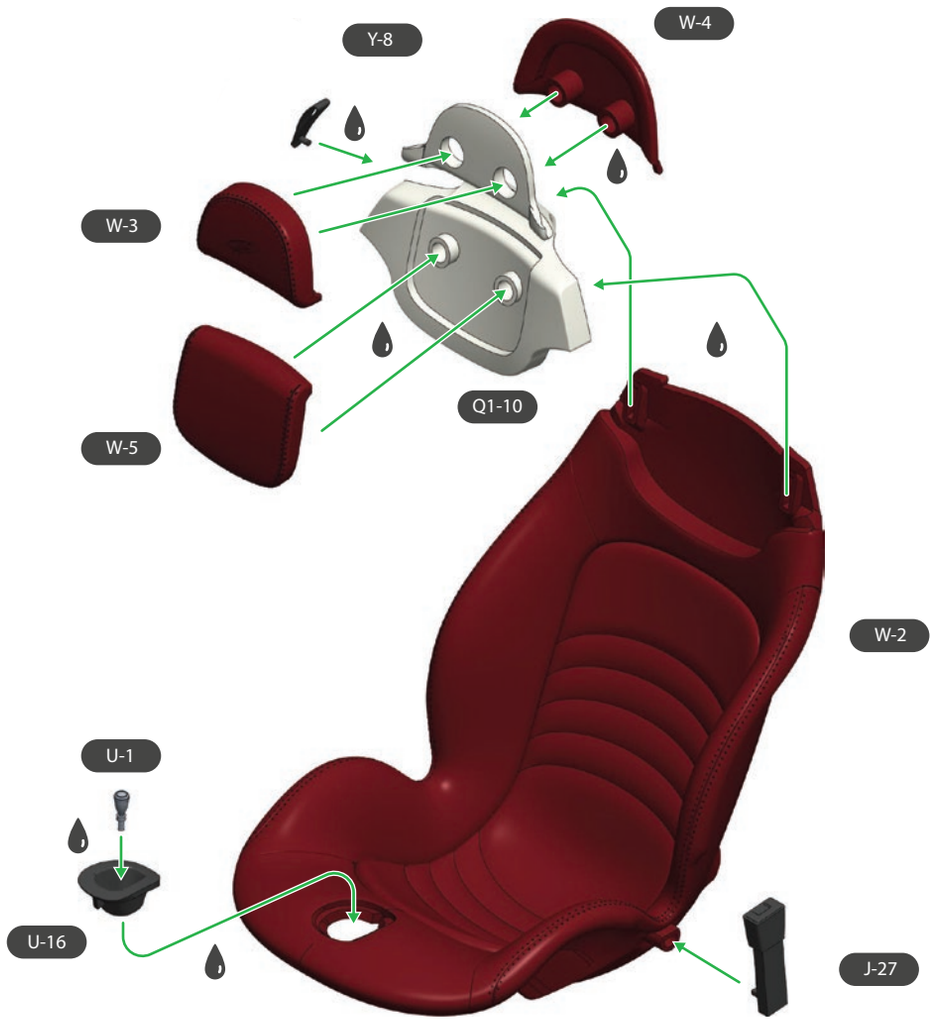

A#10

Pocher

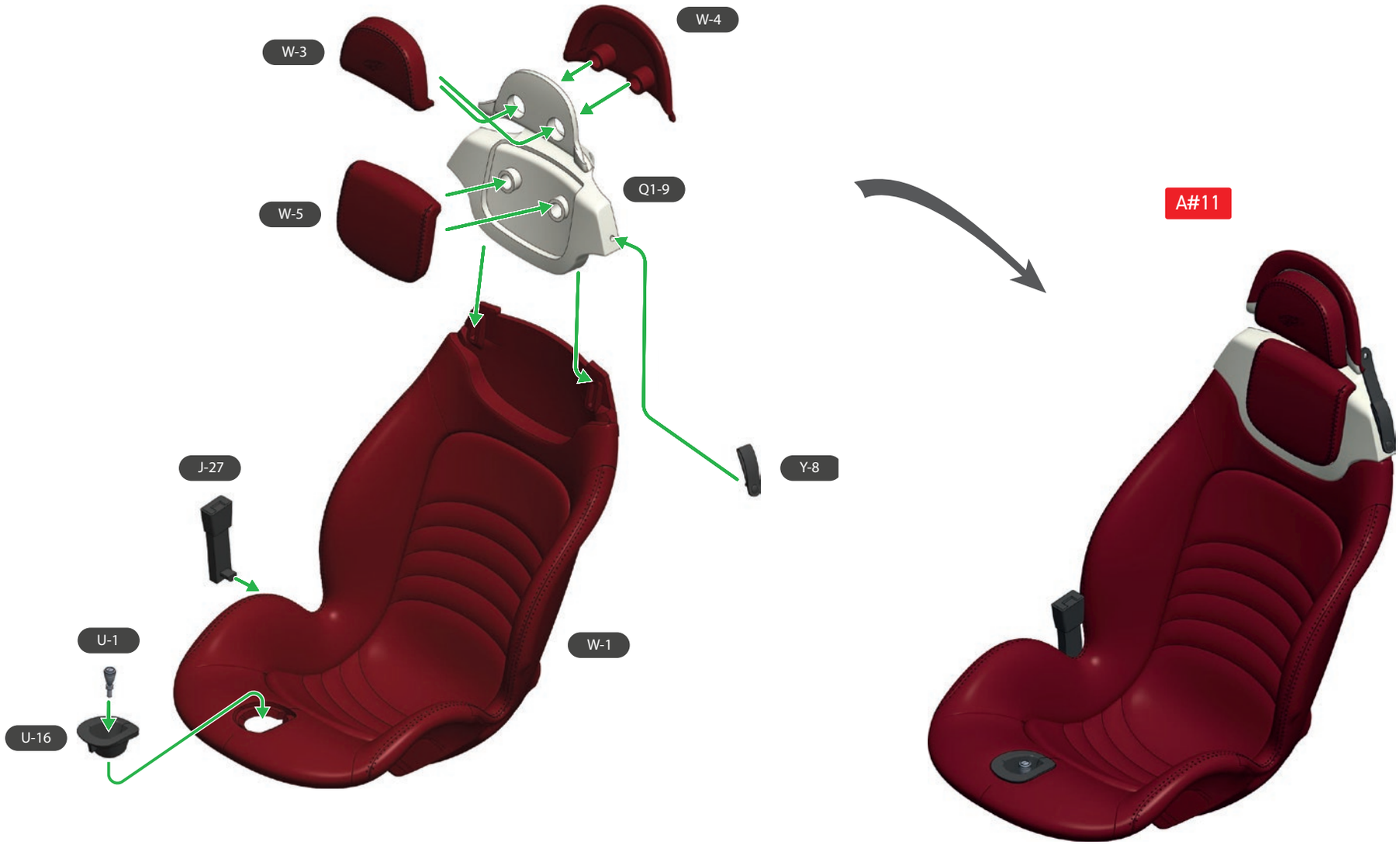

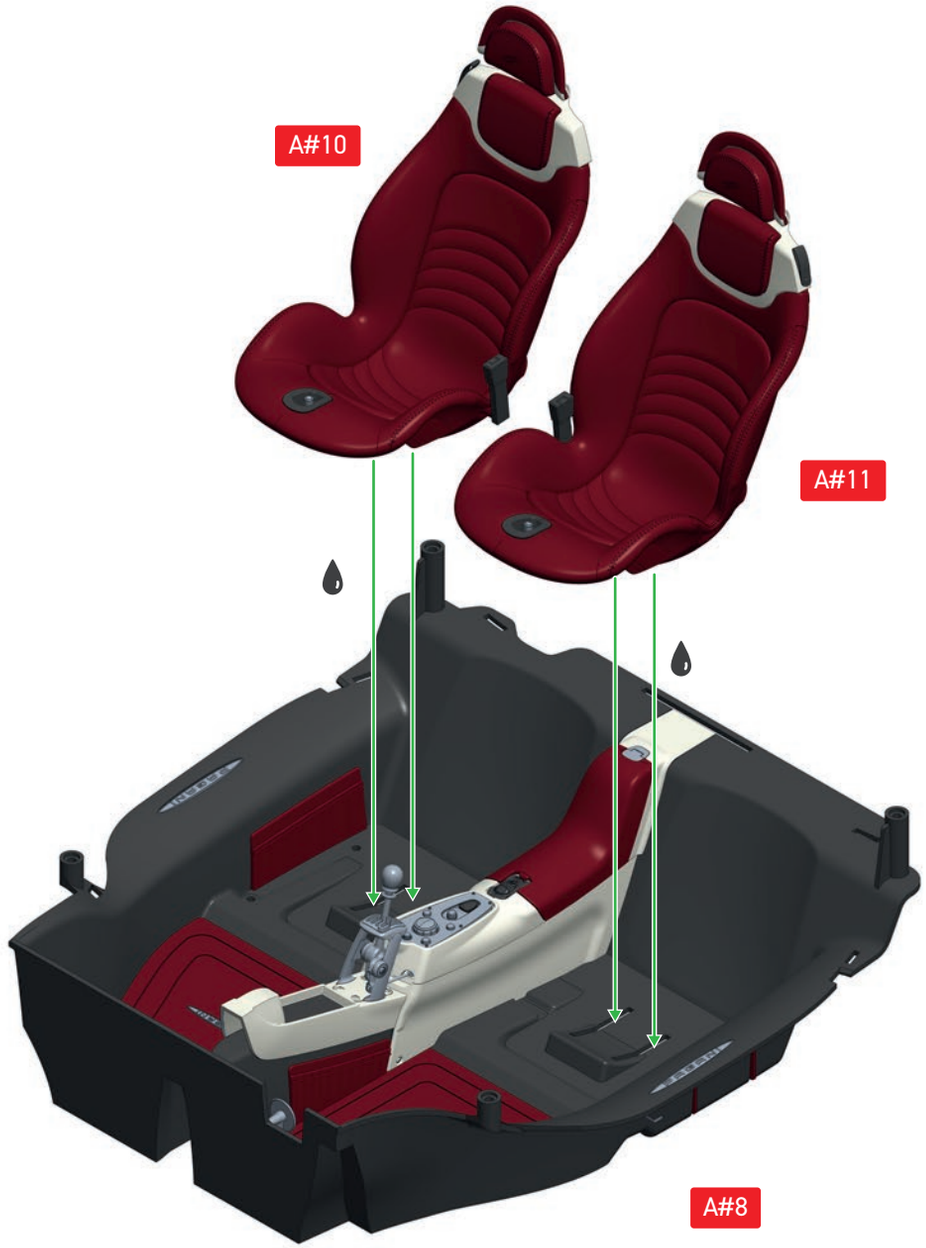
A#10
A#11
A#8

A#8

Pocher

3

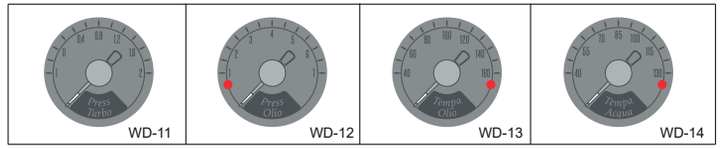
WD-11
WD-12
WD-13
WD-14

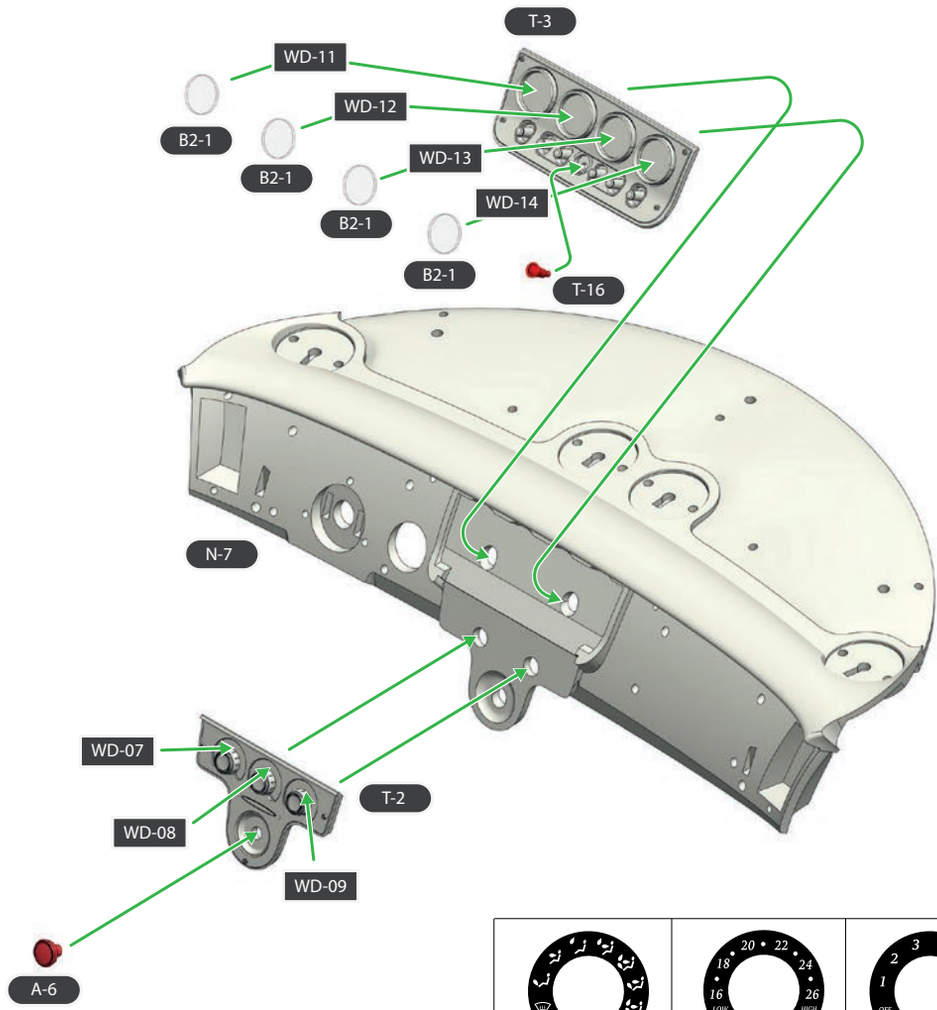
T-3
WD-11
WD-12
WD-13
WD-14
B2-1
B2-1
B2-1
B2-1
T-16
N-7
WD-07
WD-08
WD-09
T-2
A-6

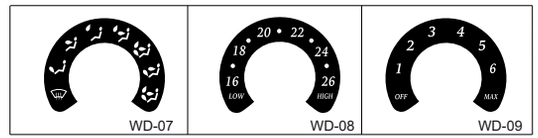
WD-07
WD-08
WD-09

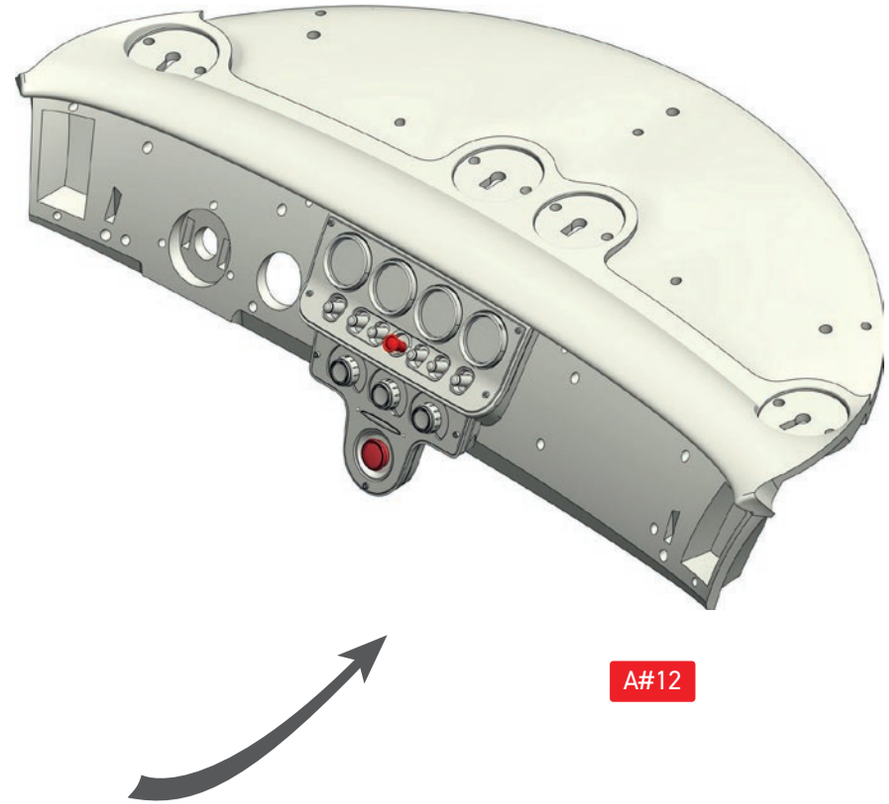

A#12

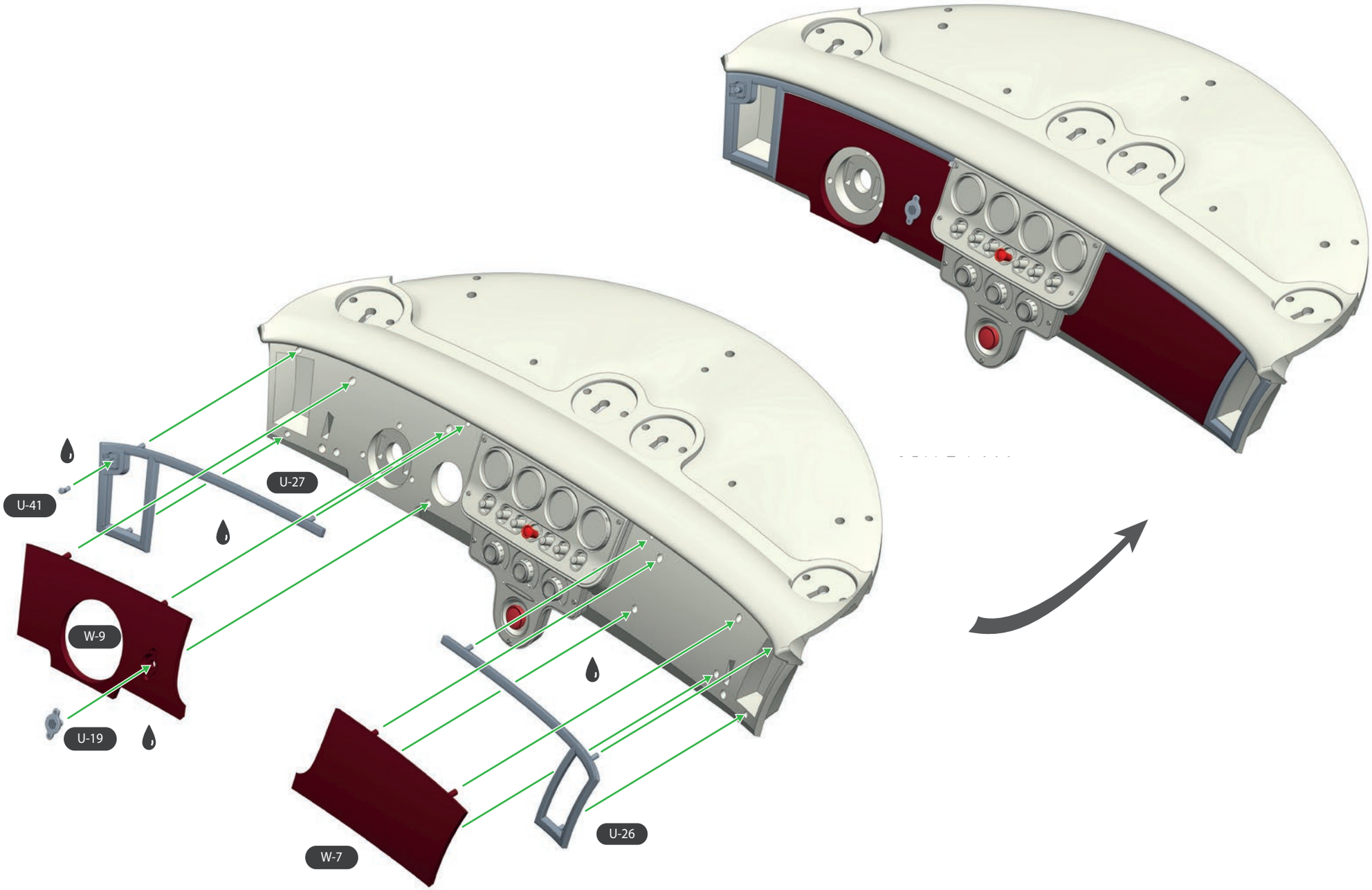
U-41
U-27
W-9
U-19
W-7
U-26

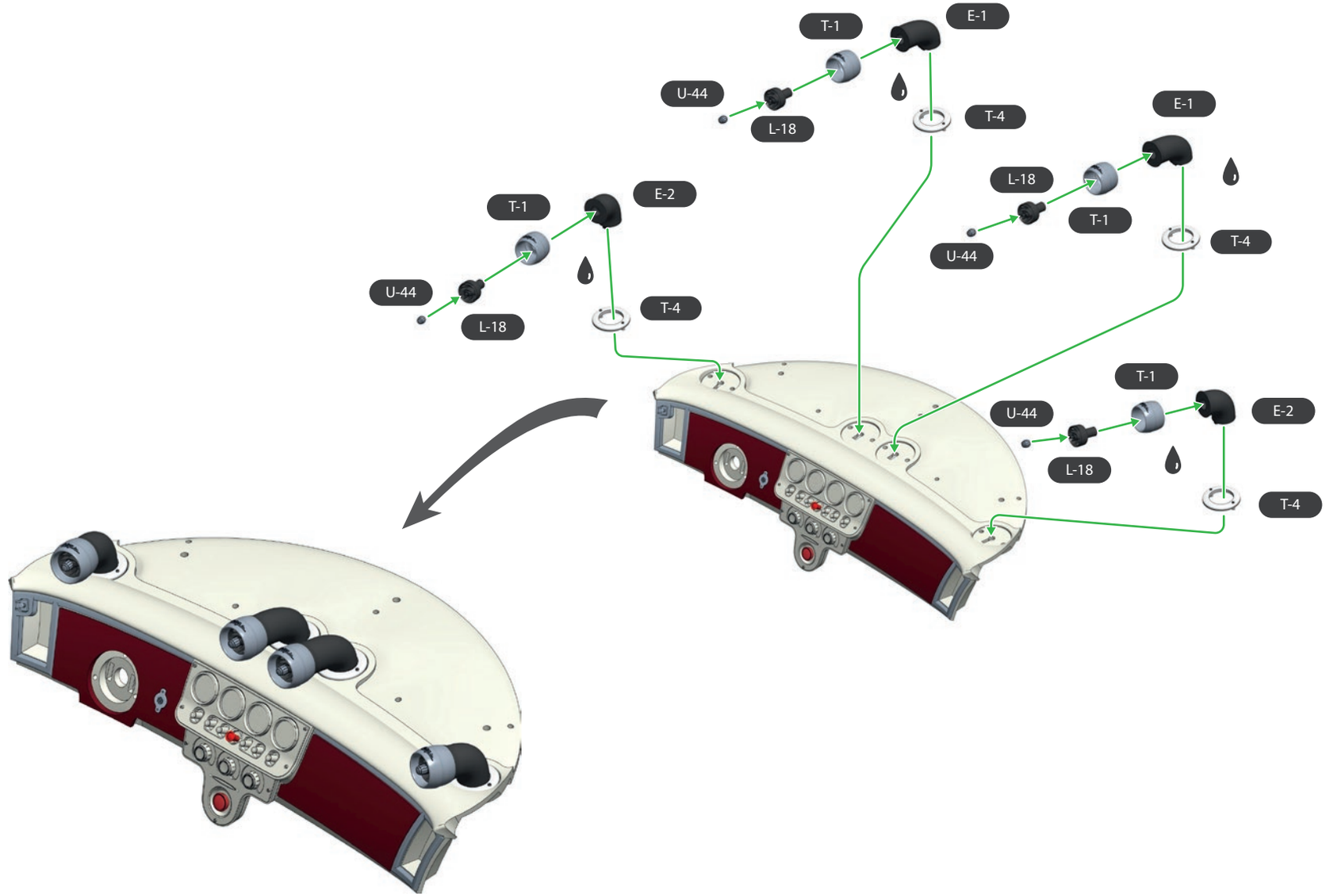
T-1
E-1
U-44
L-18
T-4
E-1
L-18
T-1
U-44
T-4
T-1
E-2
U-44
L-18
T-4
T-1
U-44
E-2
L-18
T-4

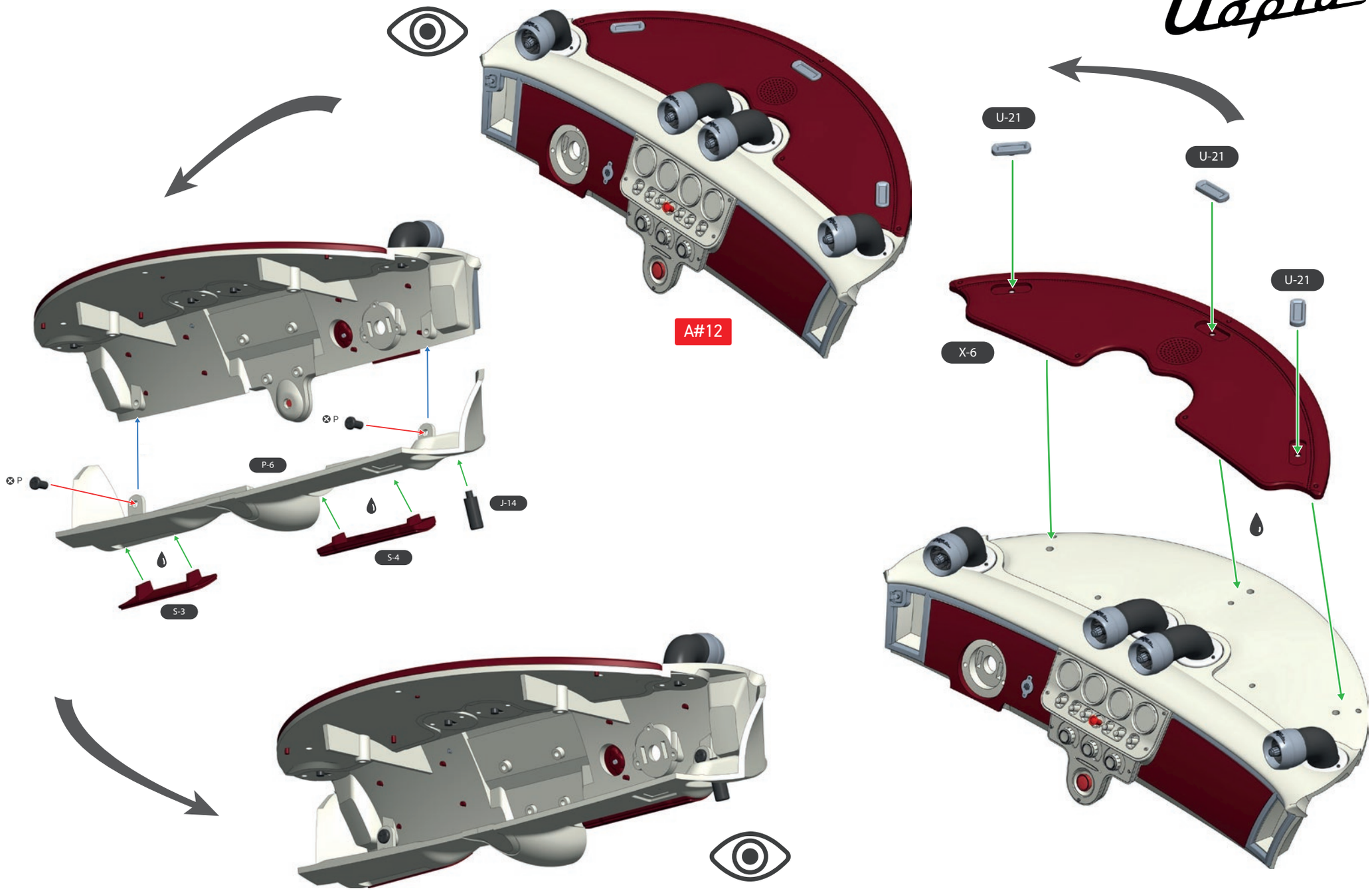

Screw P = 2

Pocher

Fit water decals to the binnicle first before fitting steering wheel assembly.

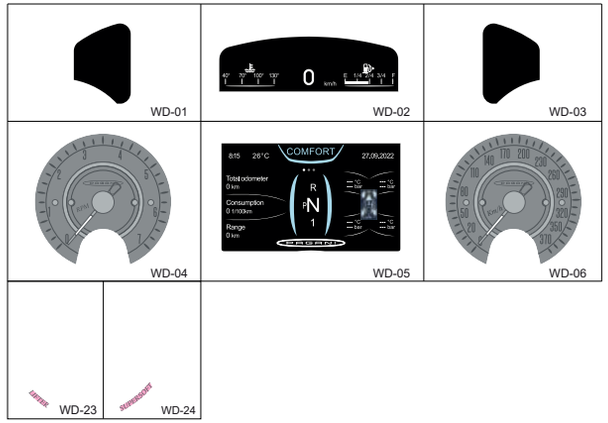

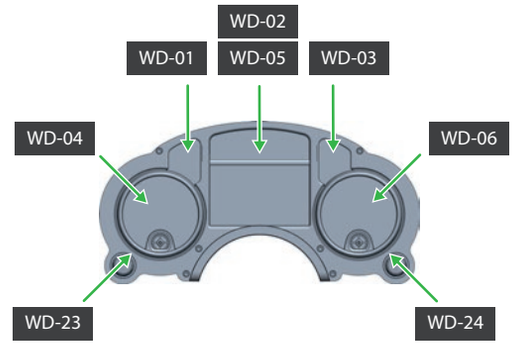

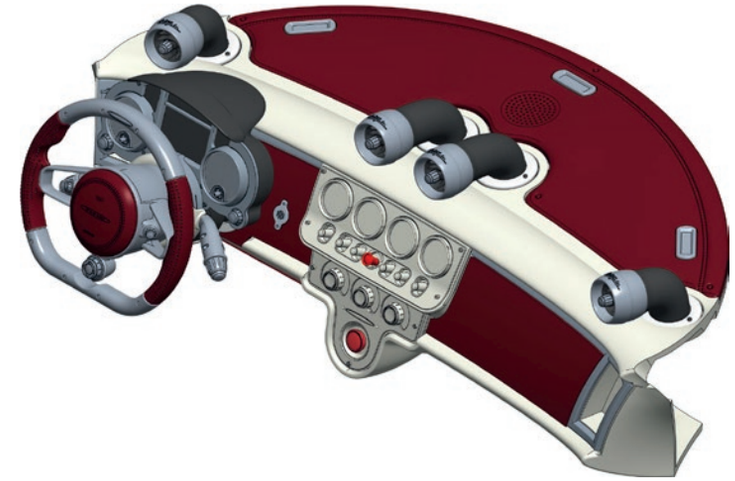

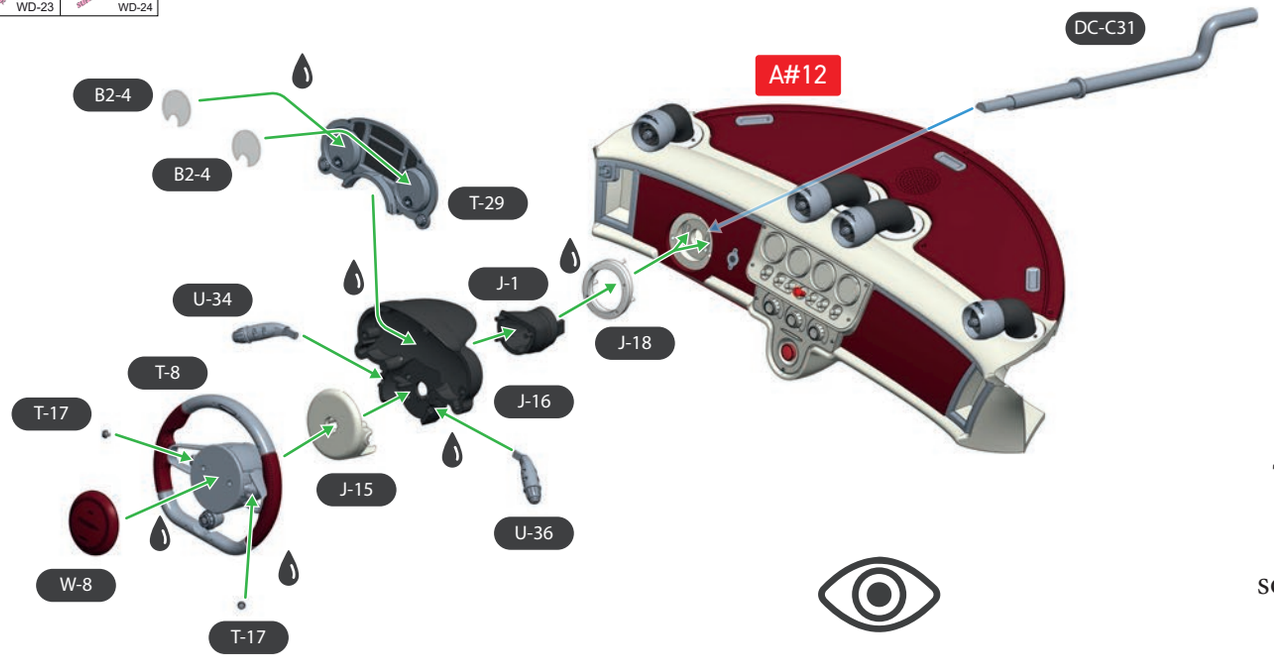

For Pagani, every component needed for the car to function is an opportunity to be creative. Even the steering wheel has been reinvented: it is fashioned from a solid aluminum block, from the spokes and hollow rim to the steering column boss, which contains the airbag.

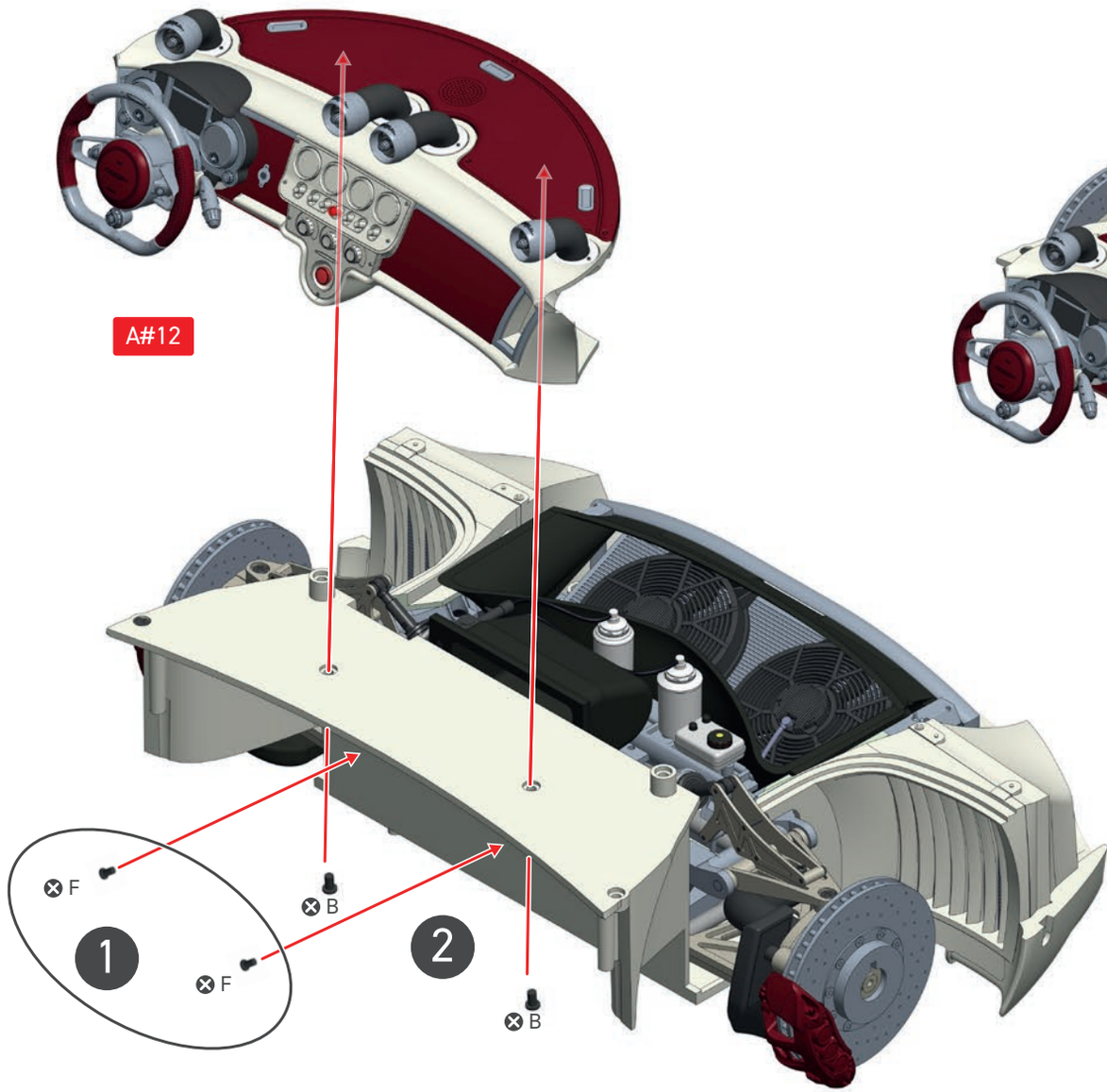

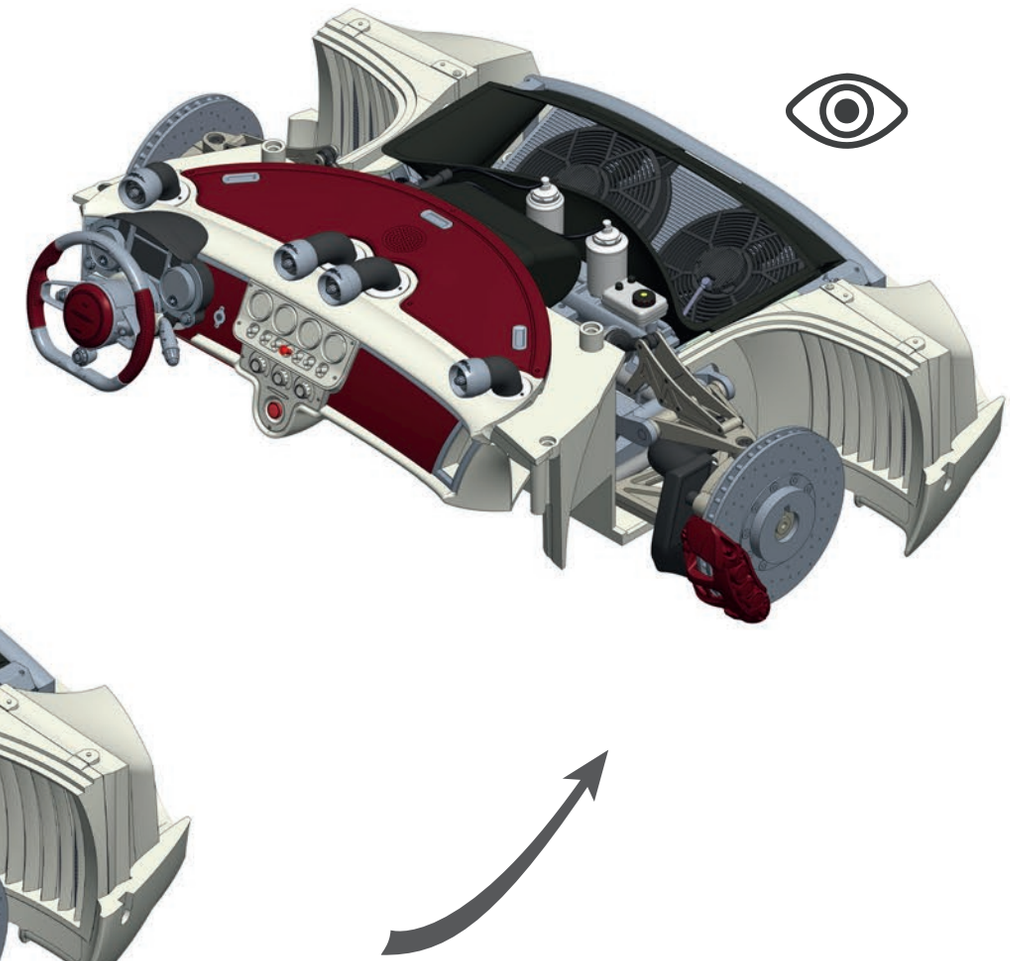

A#1

F screws must be secured tightly to avoid misalignment later in the build.

SCREW B = 2
SCREW F = 2

Pocher

4

Utopia features two expansive glass panels on the roof that bathe the cabin in natural light, creating a bright and airy atmosphere. This design element not only enhances the interior ambiance but also ensures structural integrity and safety.

Take care not to cut L-10 too short from sprue, this is used to glue to C-1.

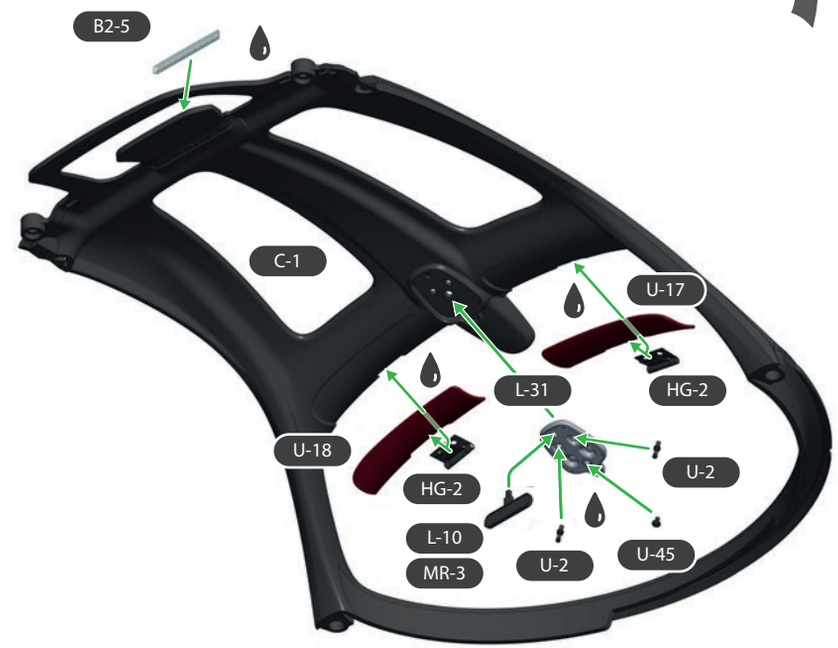

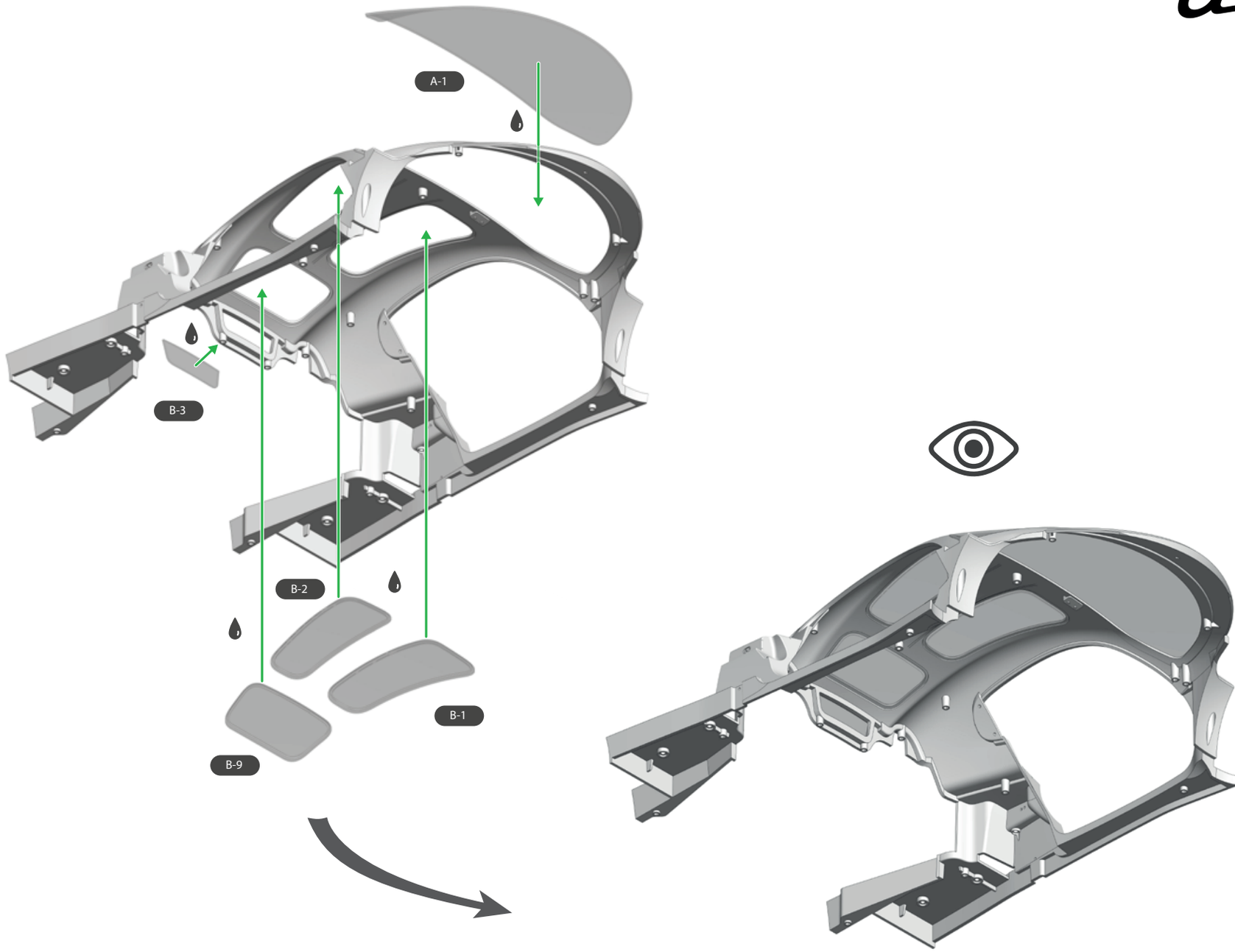
A-1
B-3
B-2
B-1
B-9

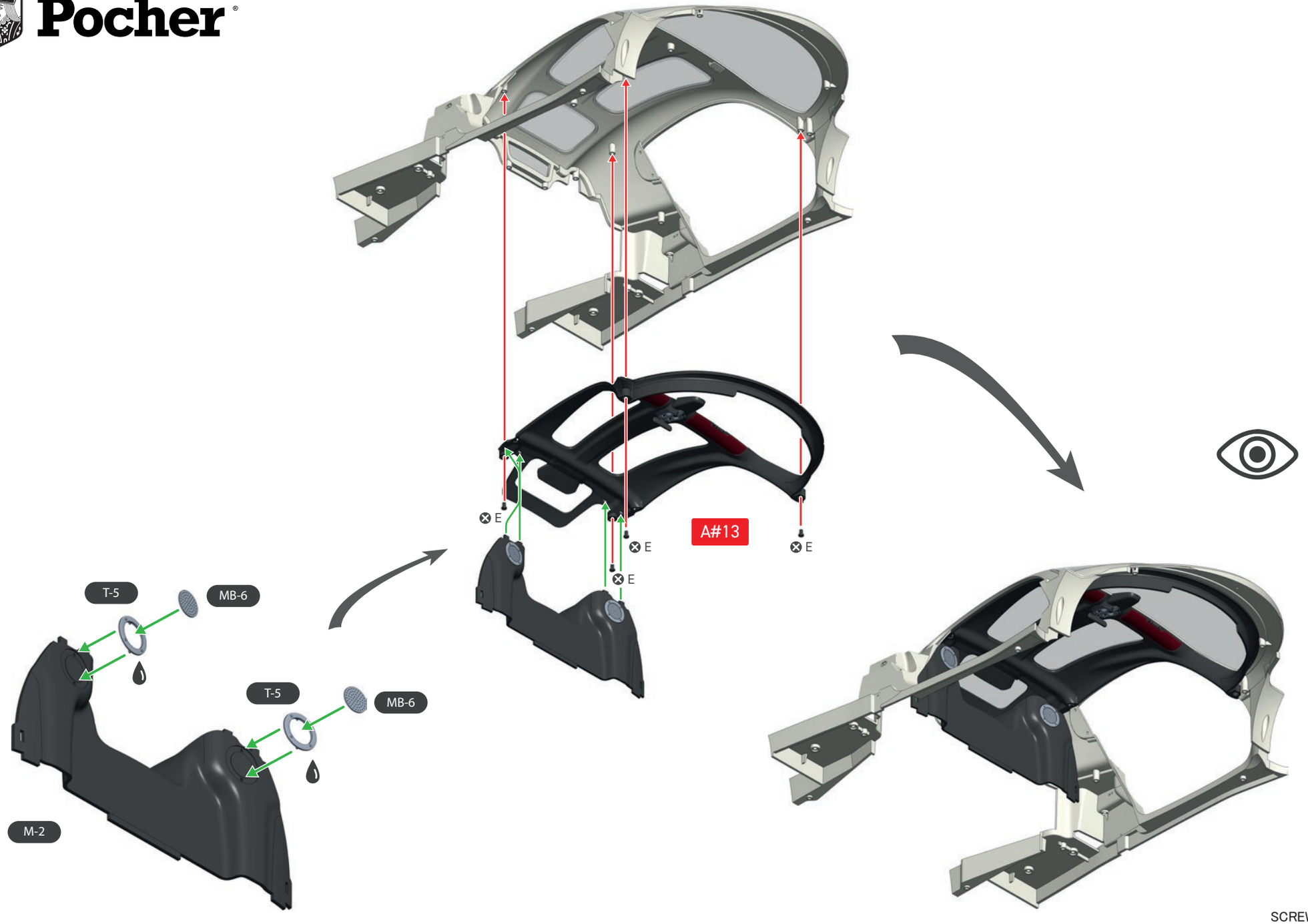

SCREW E = 4

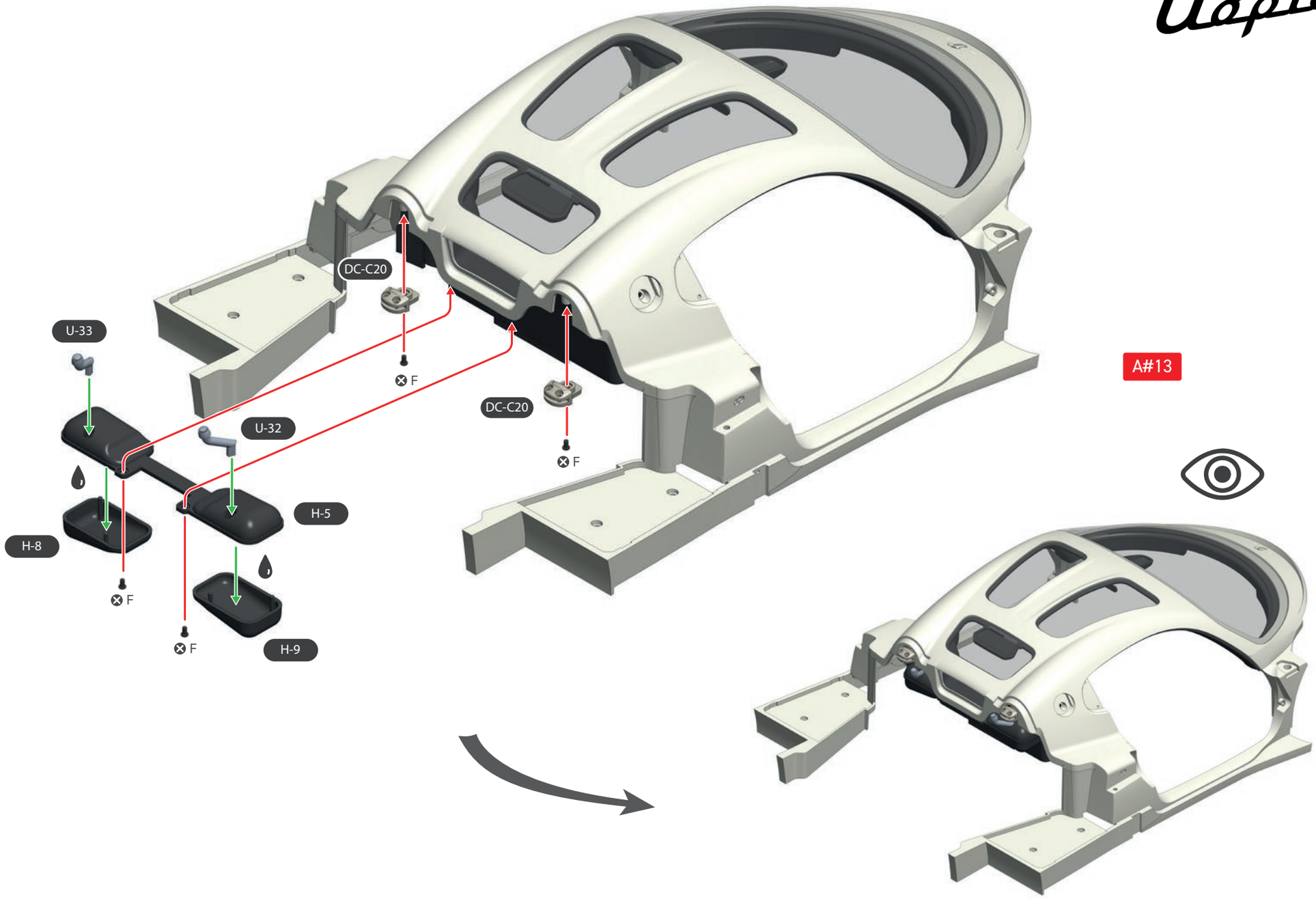

A#13

SCREW F = 4

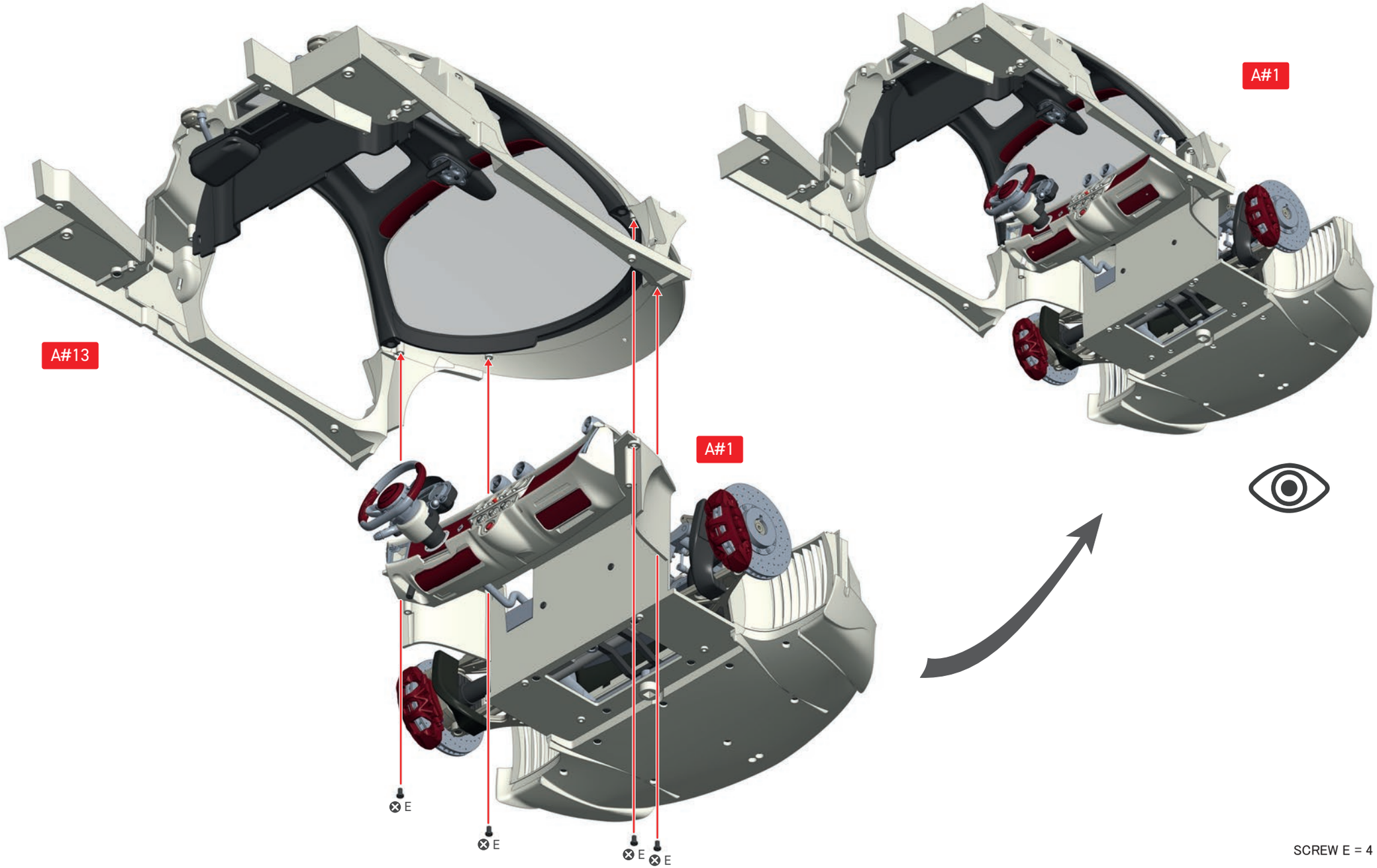

SCREW E = 4

A#1

Glue TU-1 from the rear first then move forward to the front

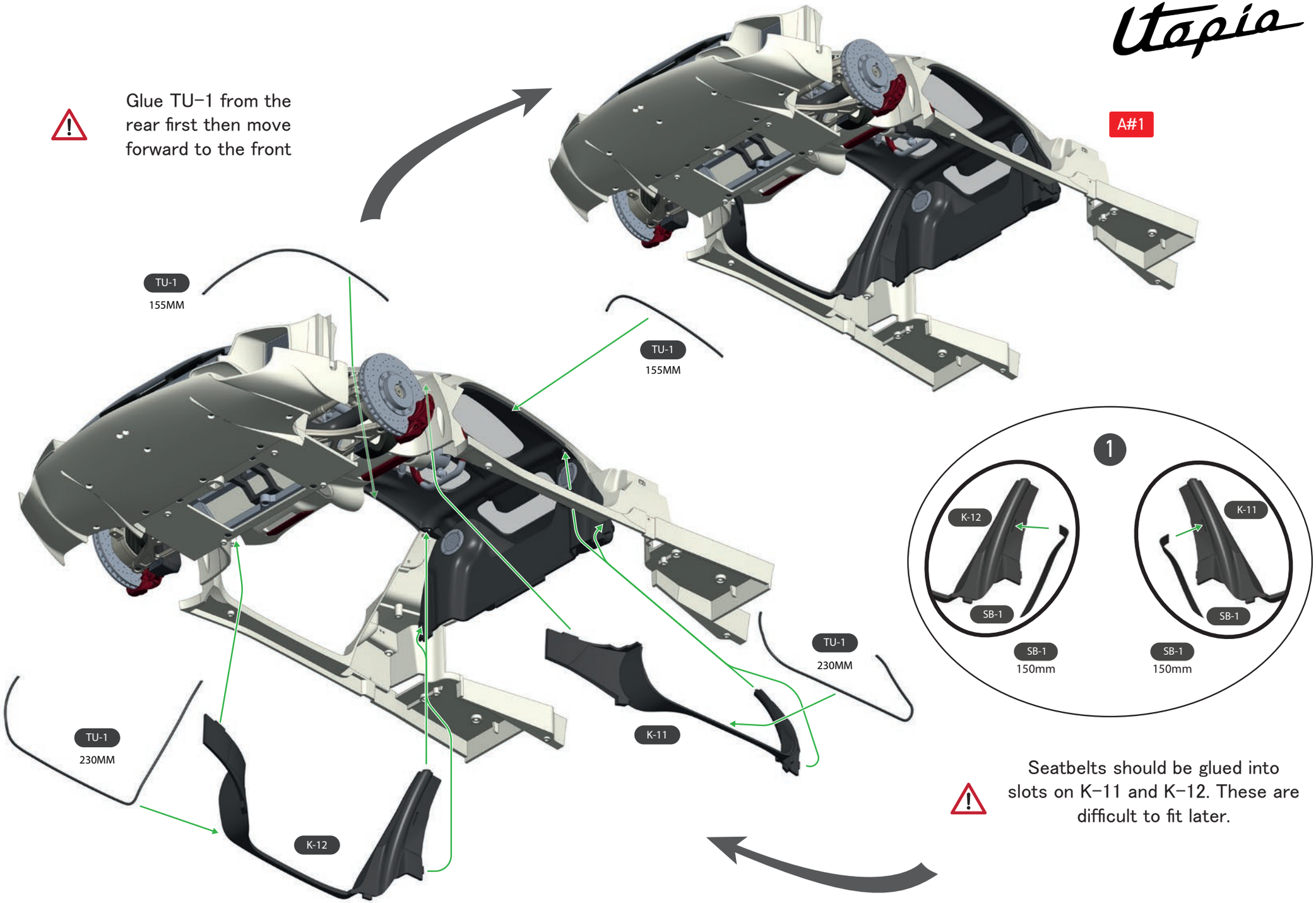

Seatbelts should be glued into slots on K-11 and K-12. These are difficult to fit later.

Pocher

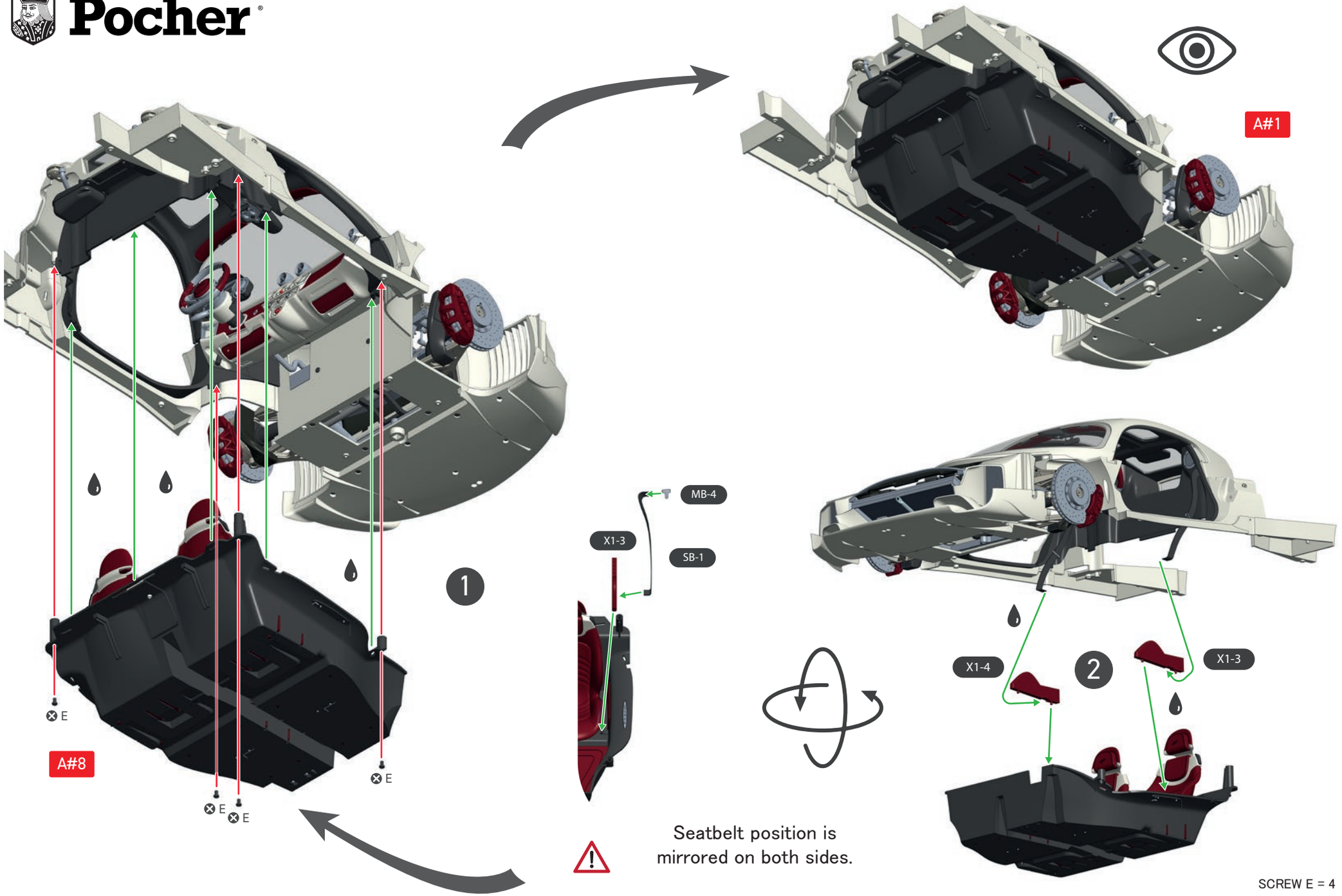
A#1
A#8
1
2
E
E
E
E
MB-4
X1-3
SB-1
X1-4
X1-3
Seatbelt position is
mirrored on both sides.
SCREW E = 4

5

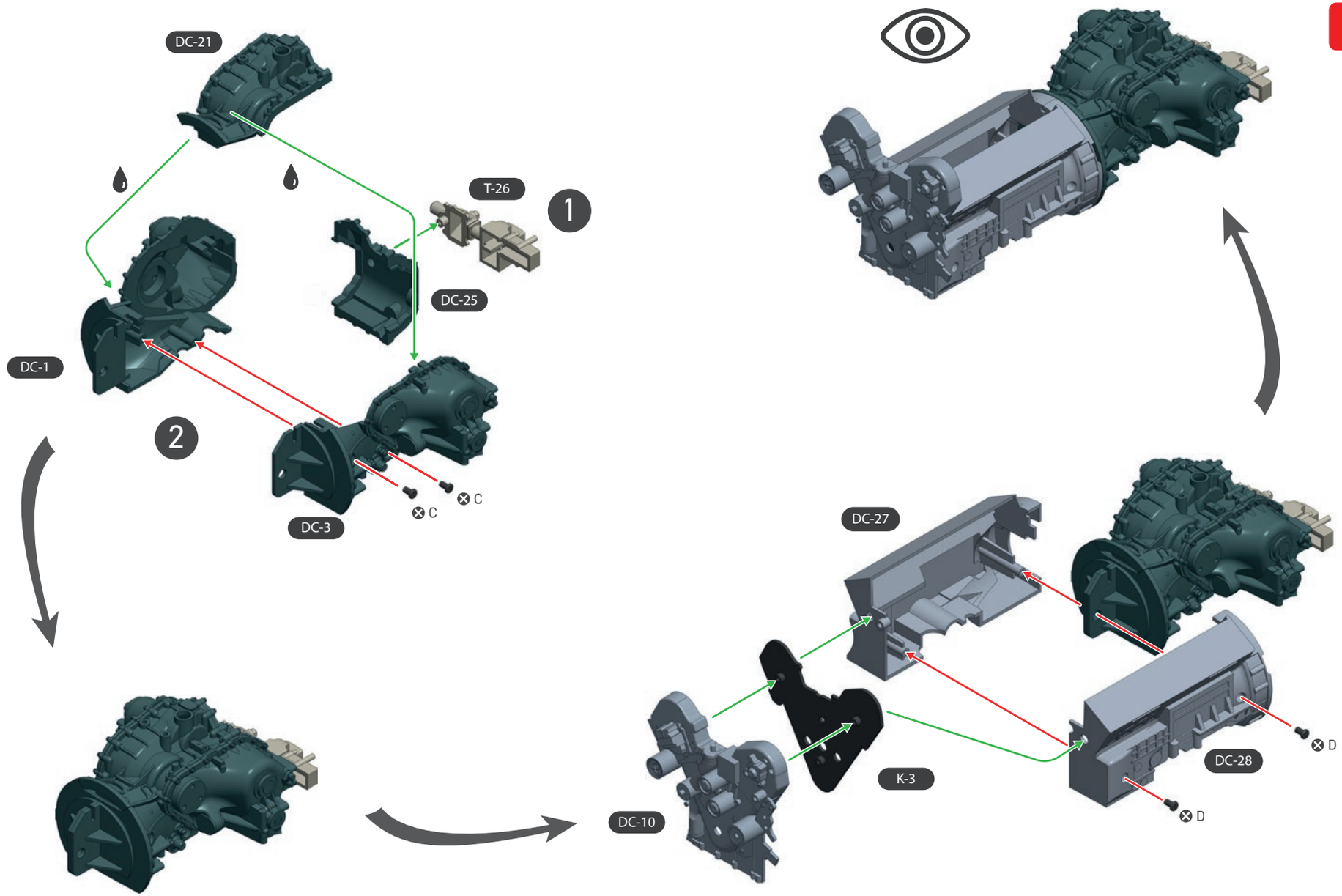

SCREW C = 2
SCREW D = 2

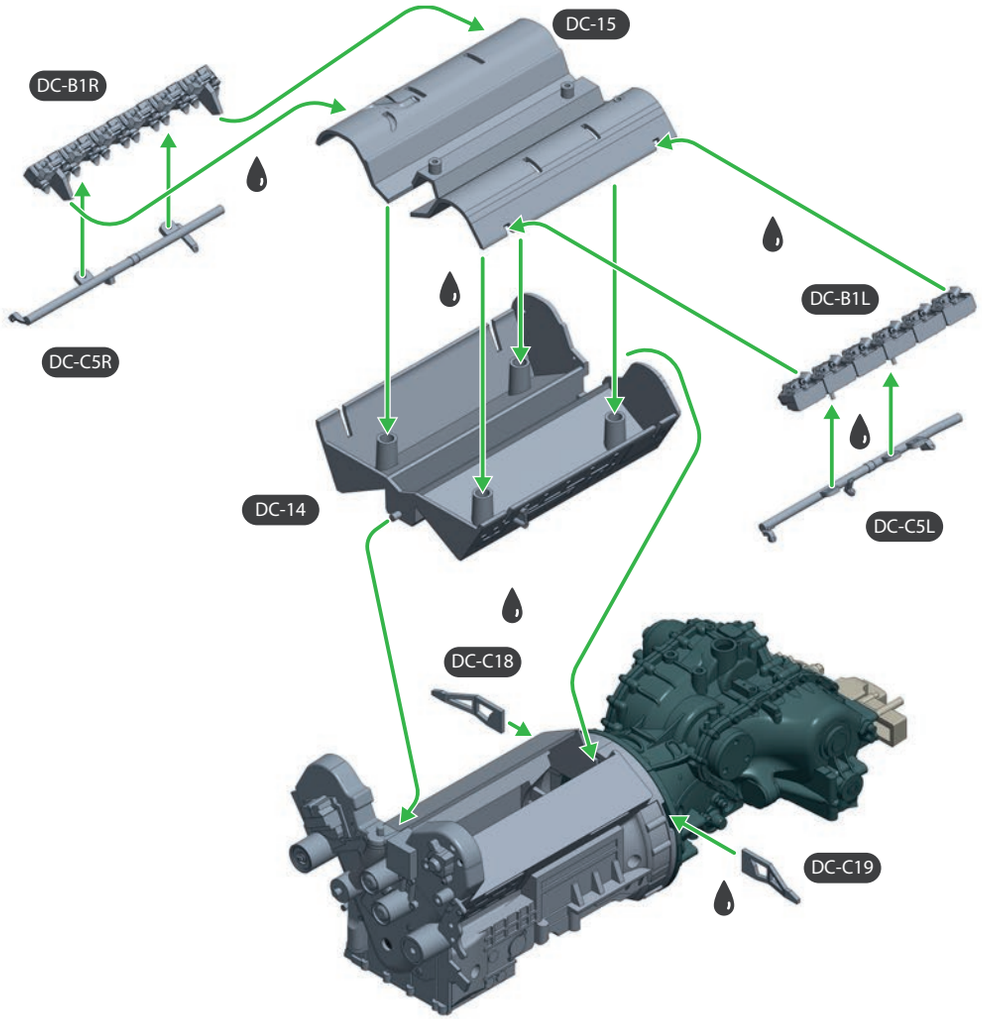

DC-C5R can clash with J-7, DC-C5R can be trimmed

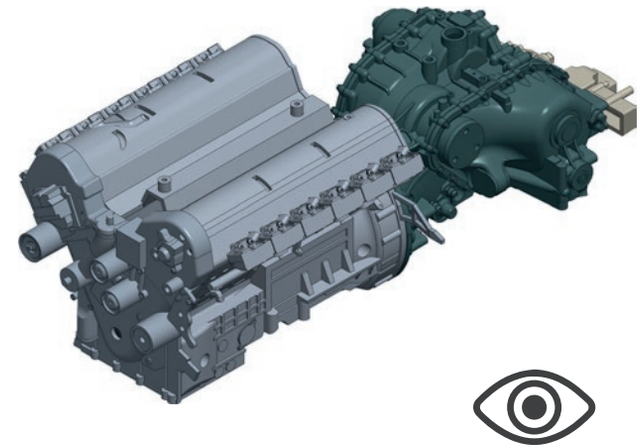

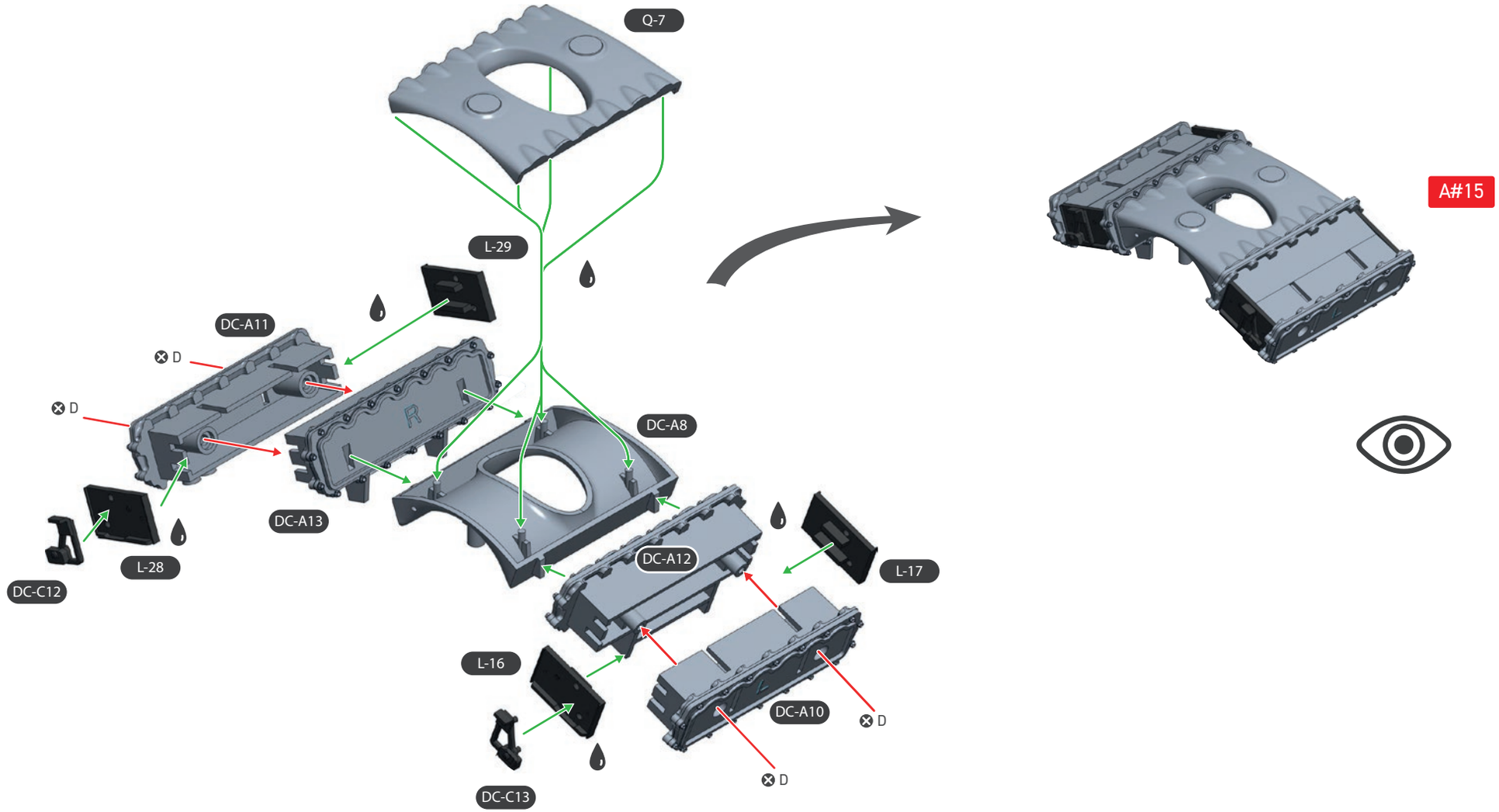
Q-7
L-29
DC-A11
D
D
DC-A8
DC-A13
L-28
DC-C12
DC-A12
L-17
L-16
DC-A10
D
D
DC-C13
A#15

SCREW D =4

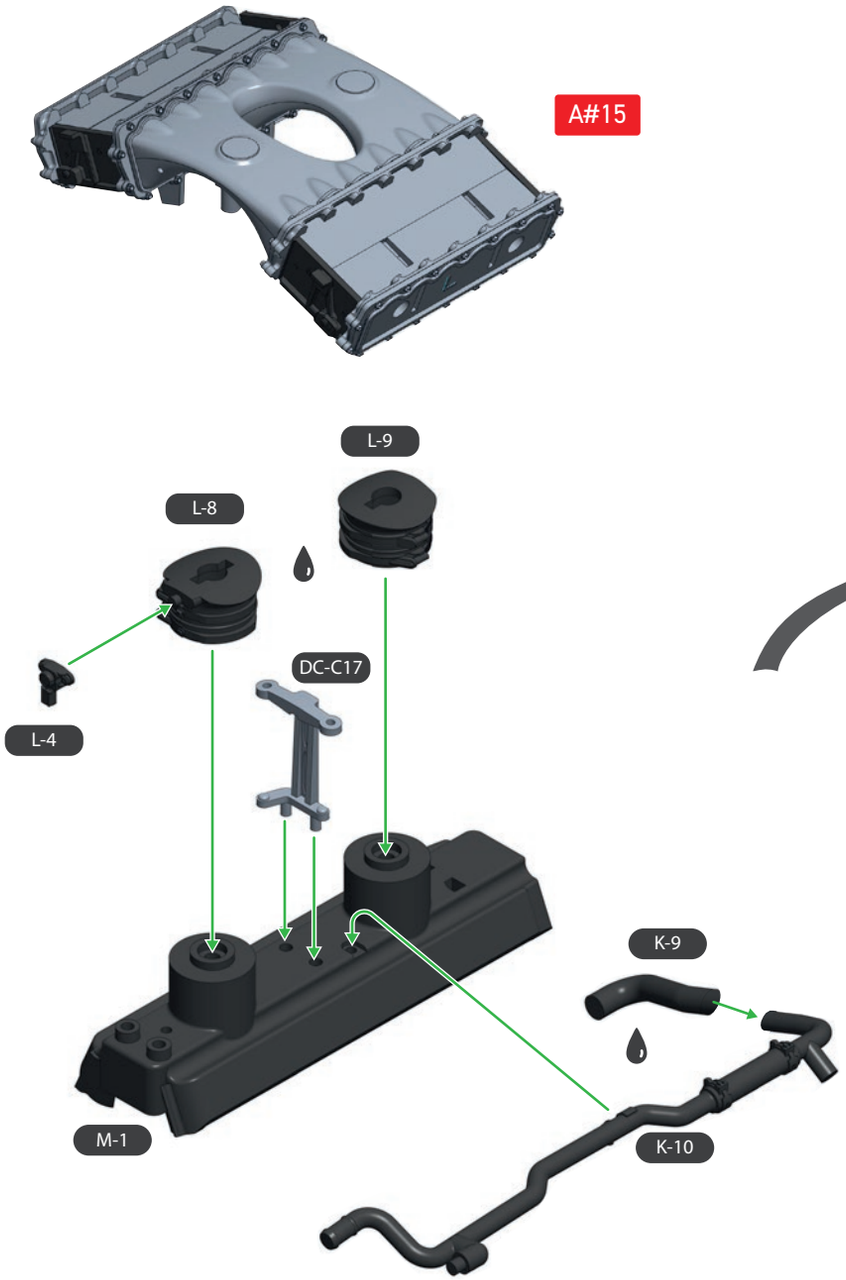

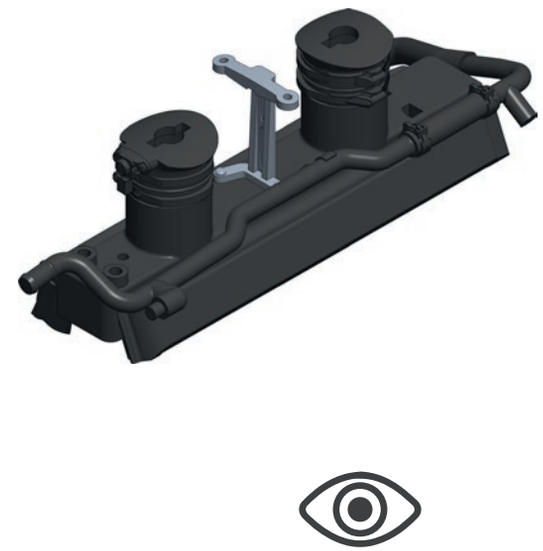

The base of DC-A8 is keyed, make sure that L-8 and L-9 are correctly aligned before glued.

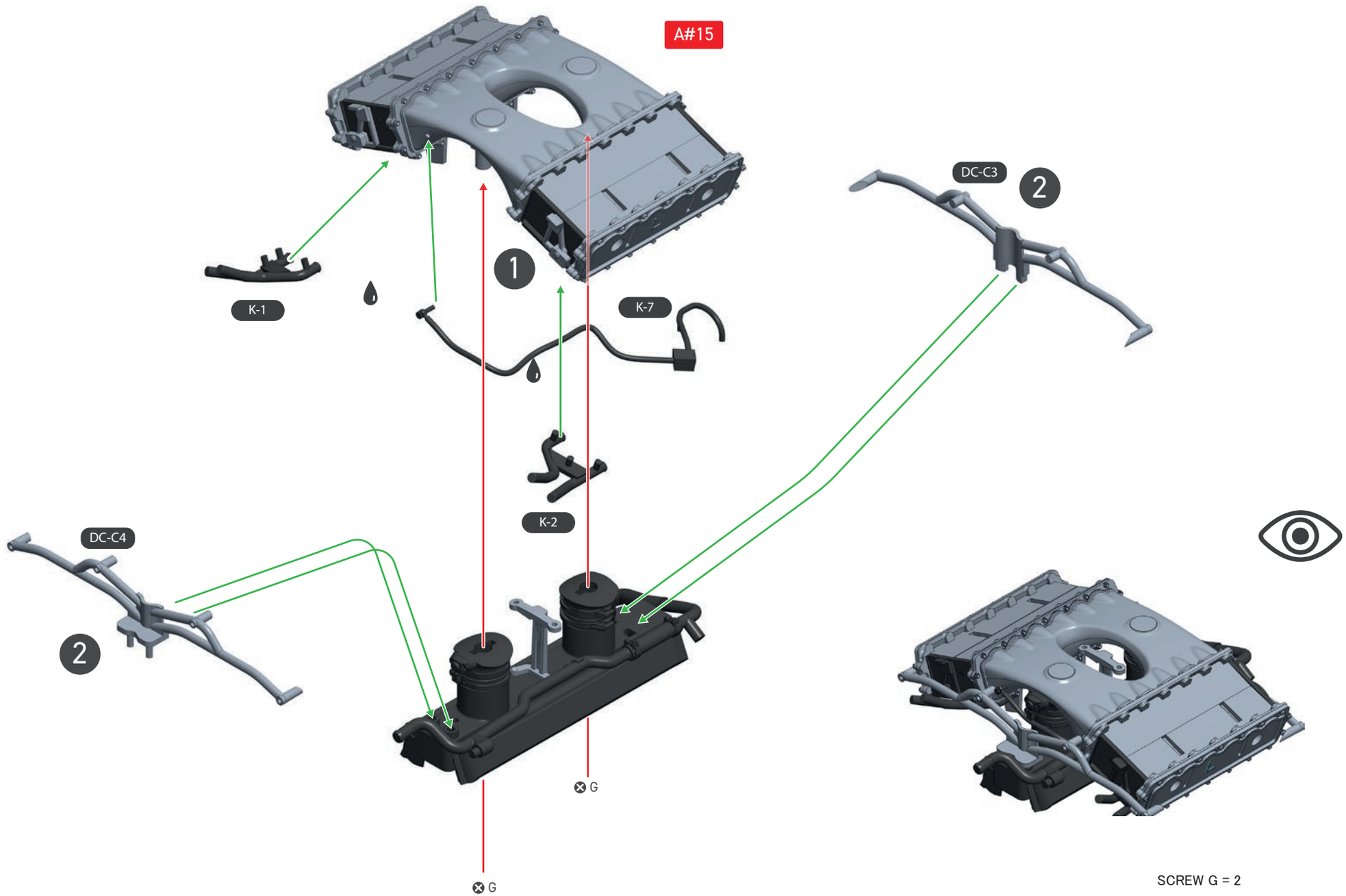

SCREW G = 2

Pocher

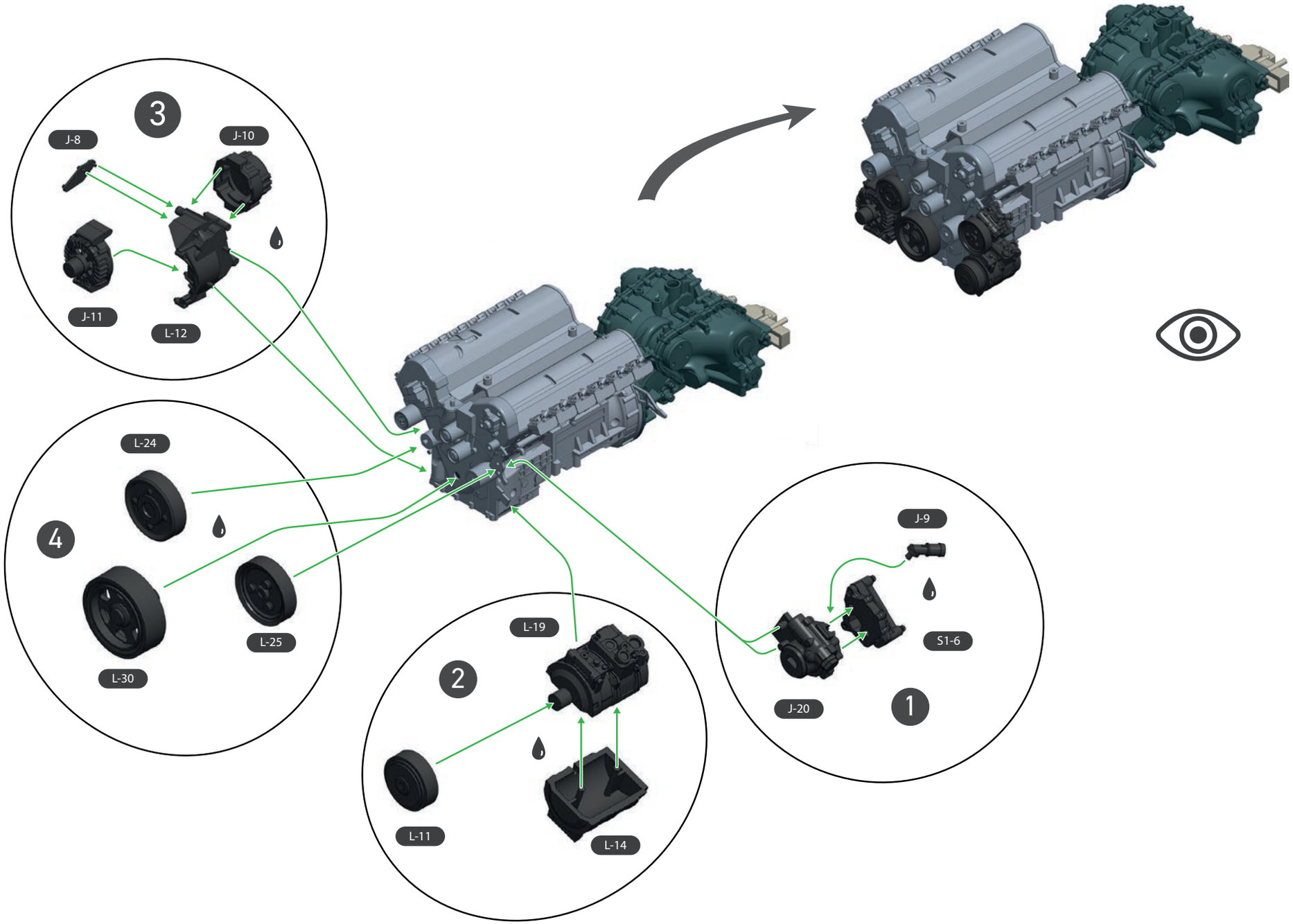

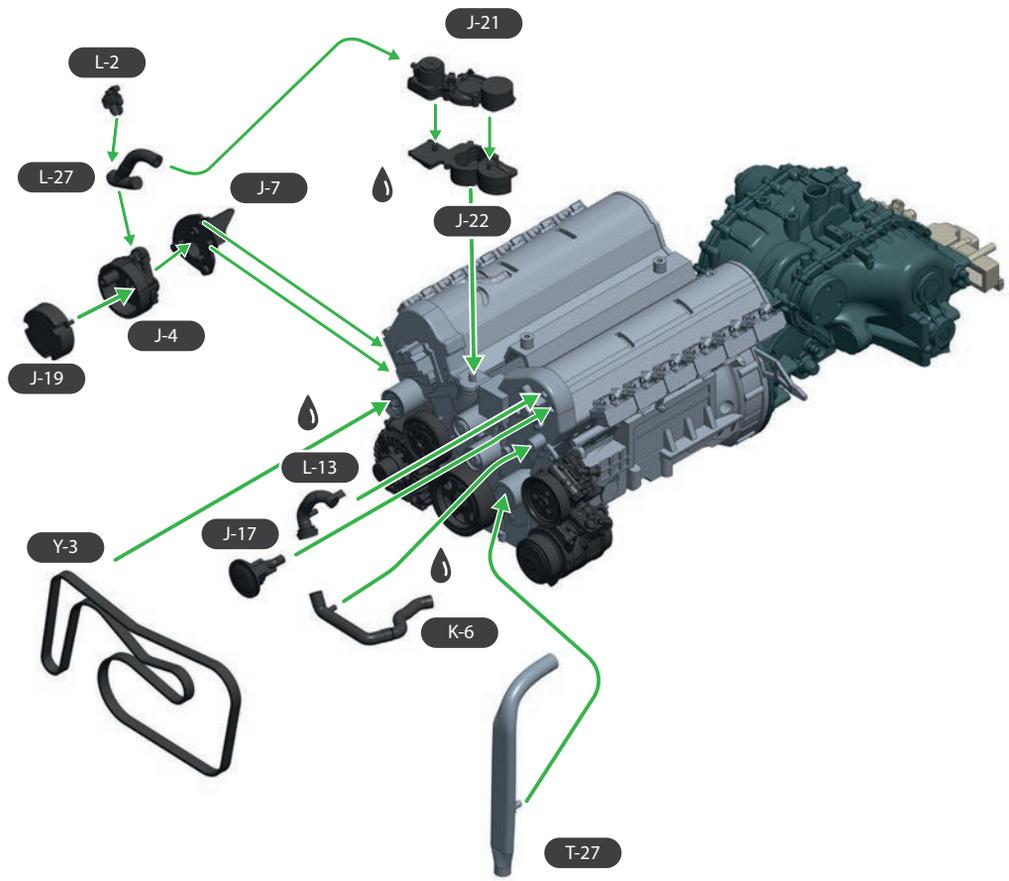

The Pagani V12 engine, a 6-litre biturbo specially built by Mercedes-AMG for Pagani, is the result of enormous development work: it delivers 864 bhp and, above all, a prodigious 1100 Nm of torque.

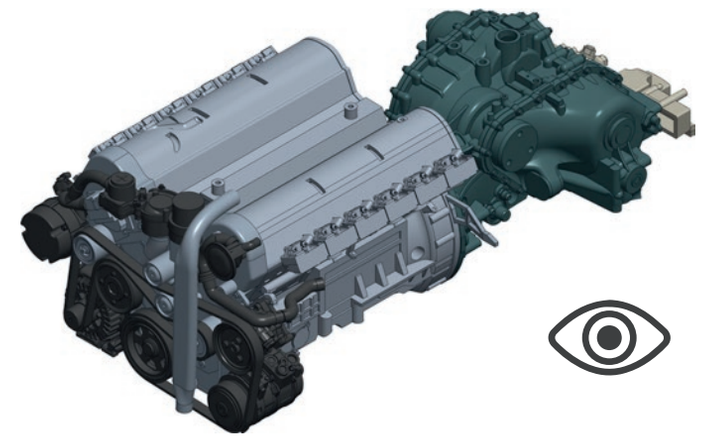

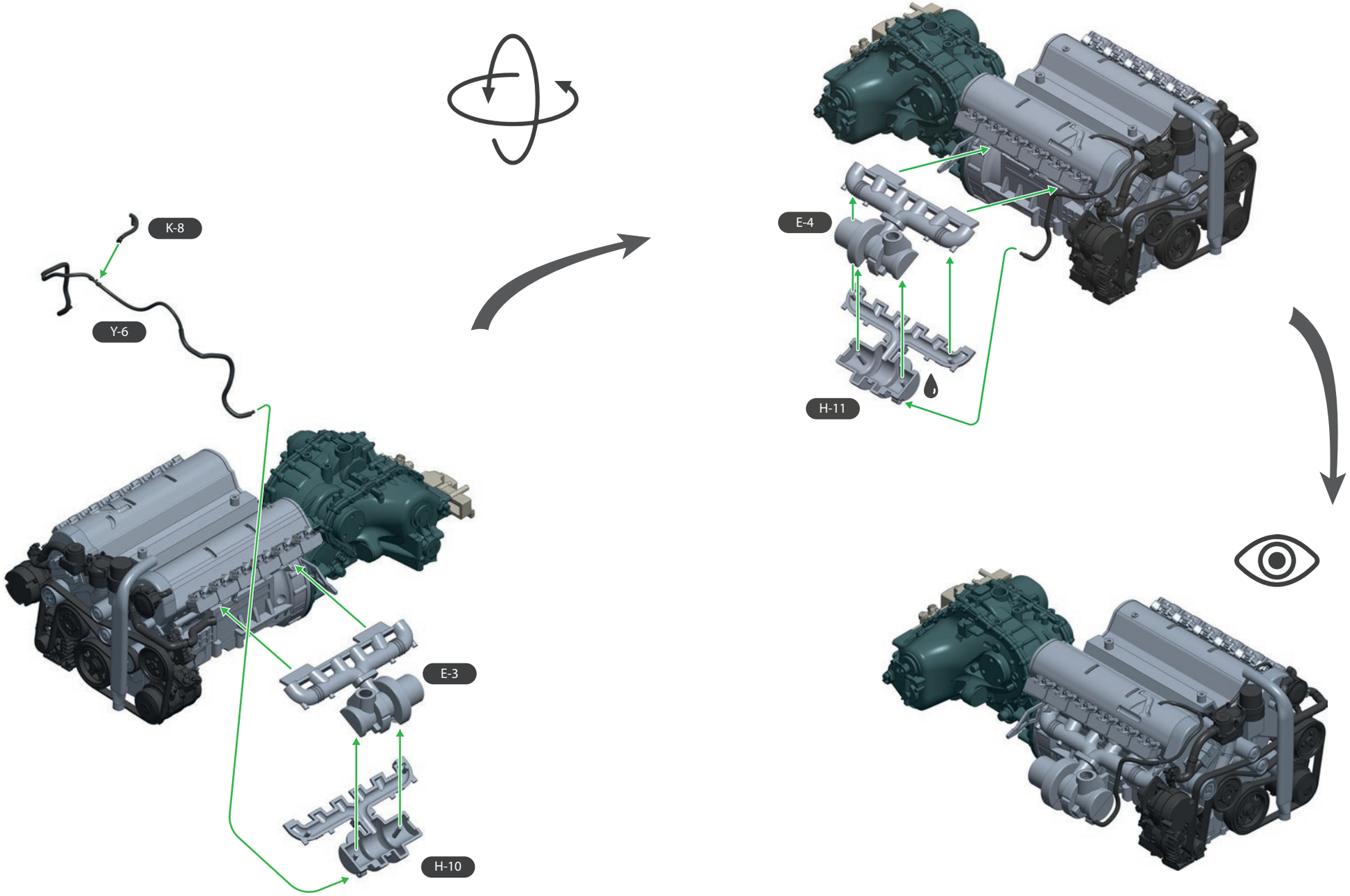
K-8
Y-6
E-3
H-10
E-4
H-11

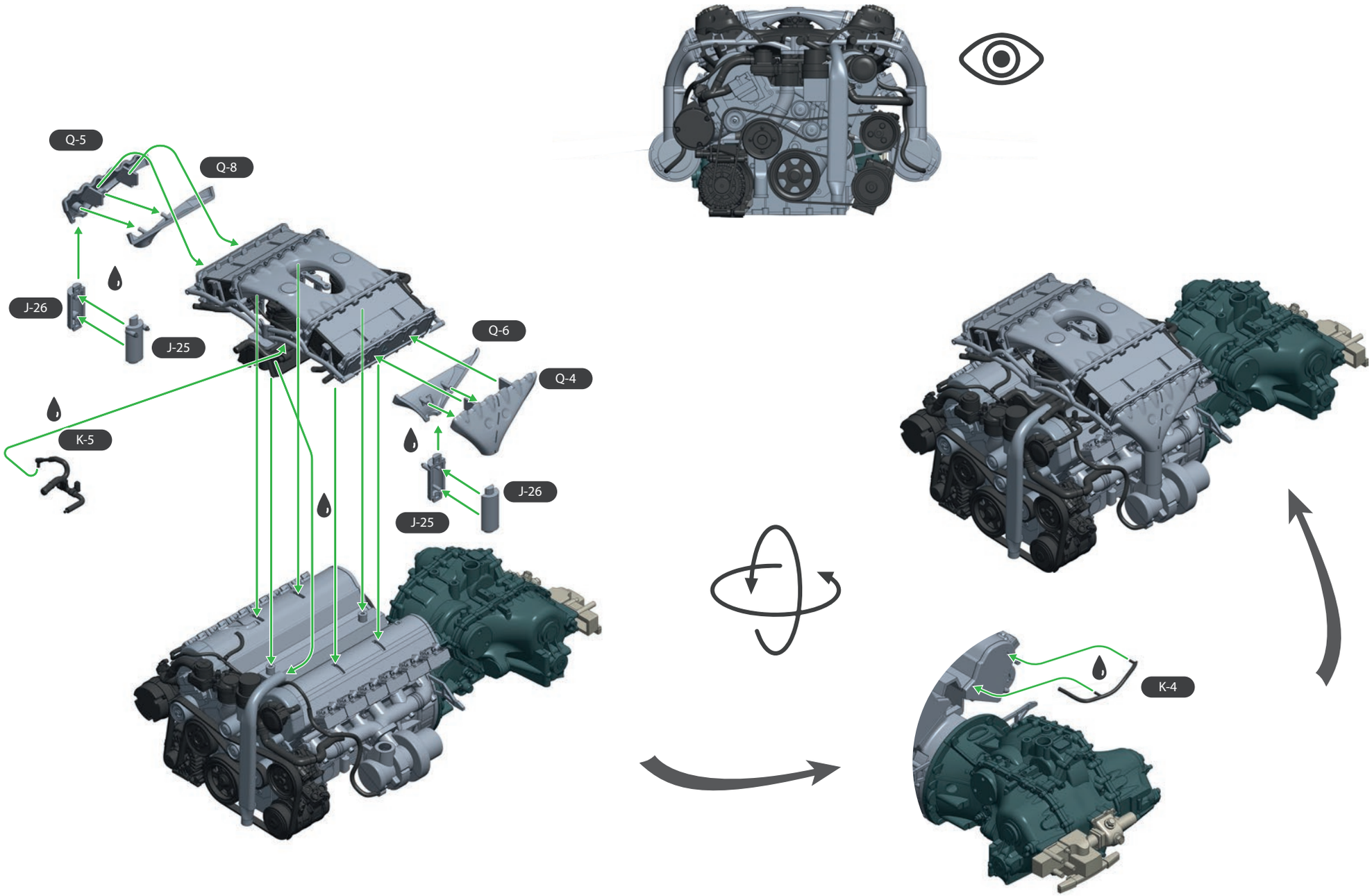
Q-5
Q-8
J-26
J-25
Q-6
Q-4
K-5
J-26
J-25
K-4

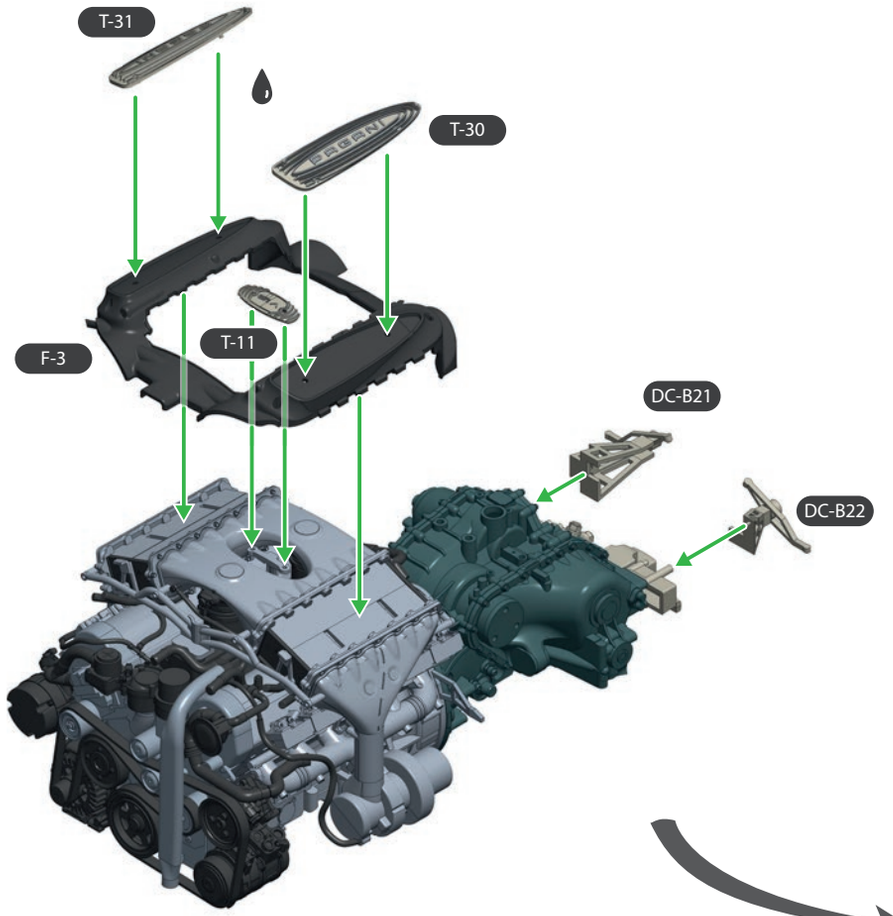

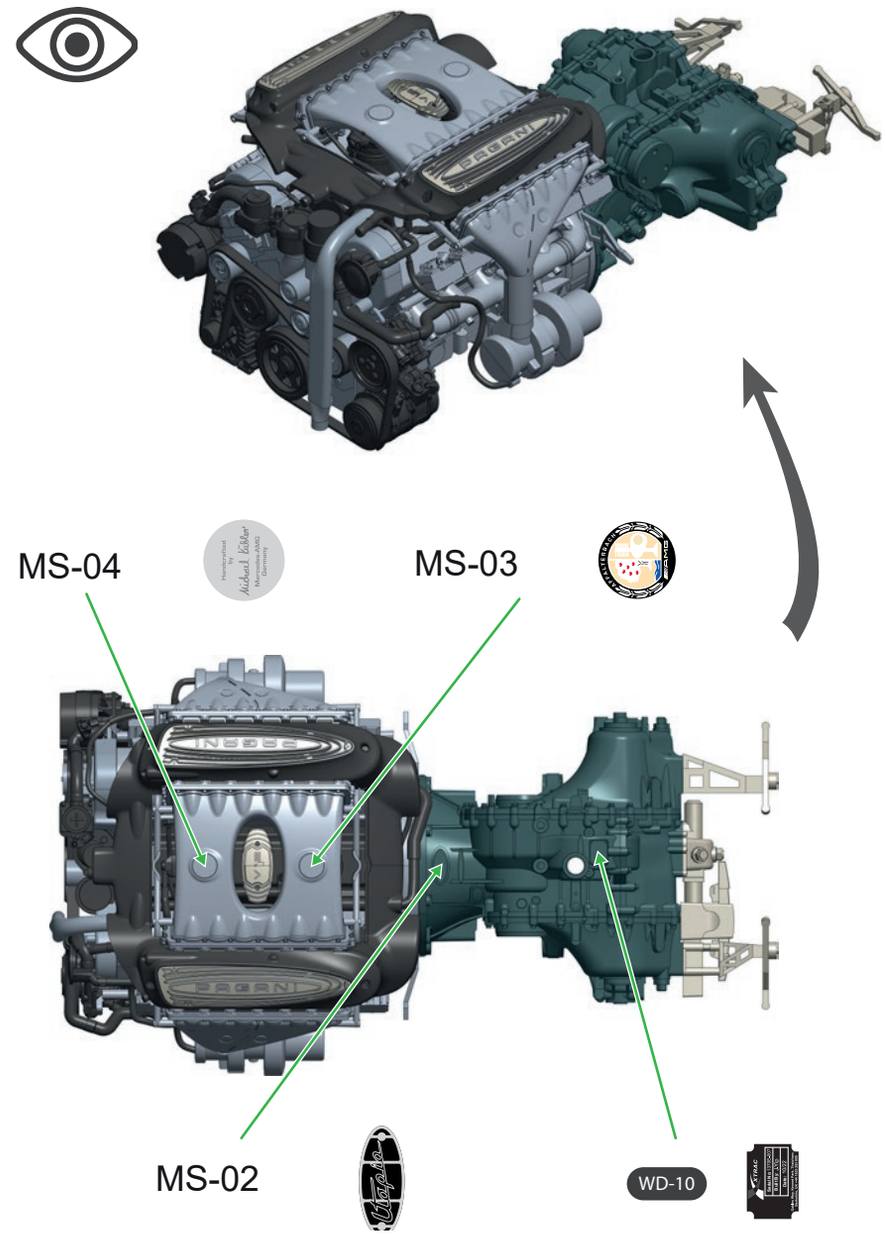

Each engine is hand-built by a dedicated technician at Mercedes-AMG, who then signs the engine. These engines are specifically tuned for Pagani cars, ensuring optimal performance and integration with the car's design.

6

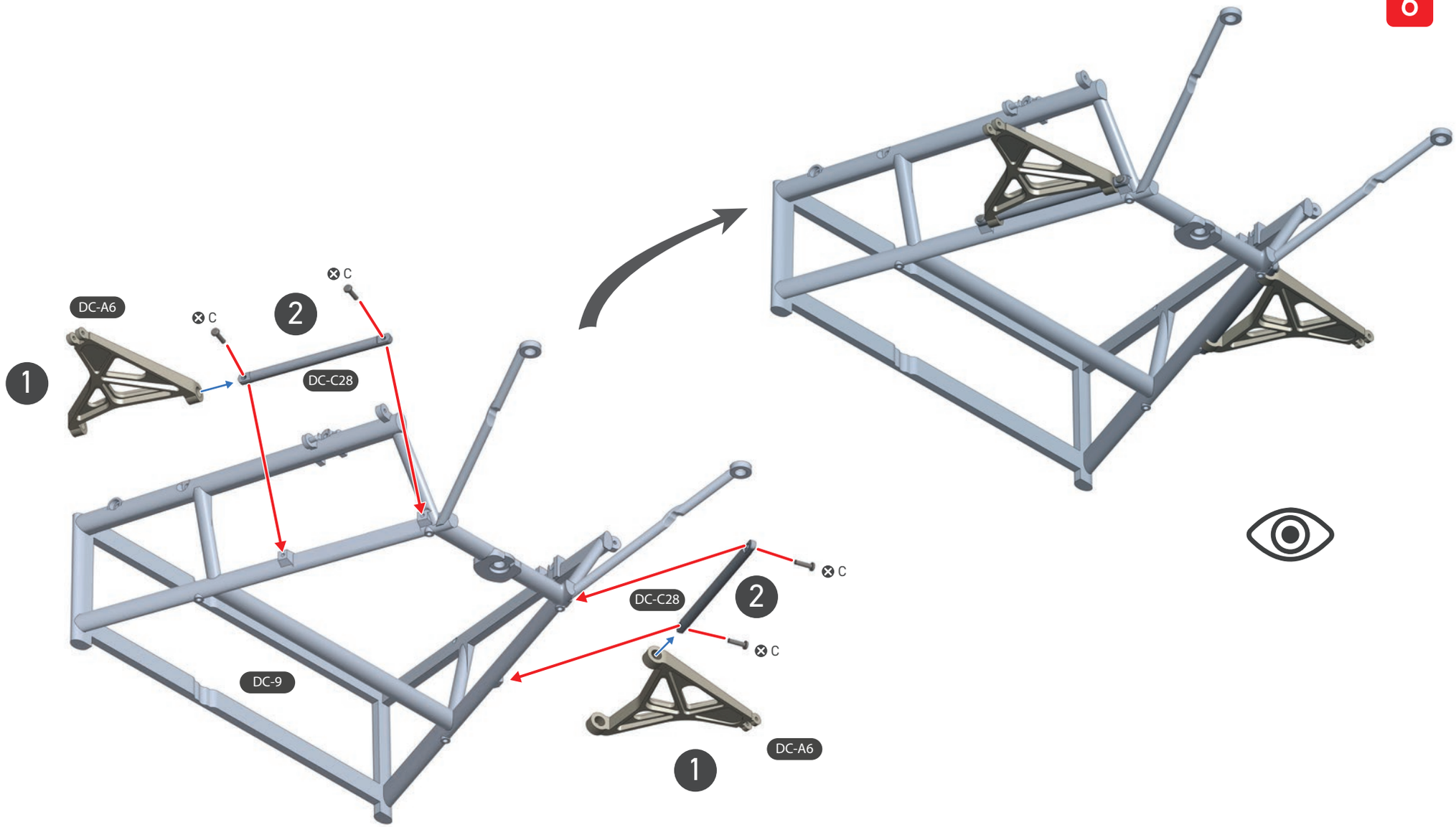

SCREW C = 4

Pocher

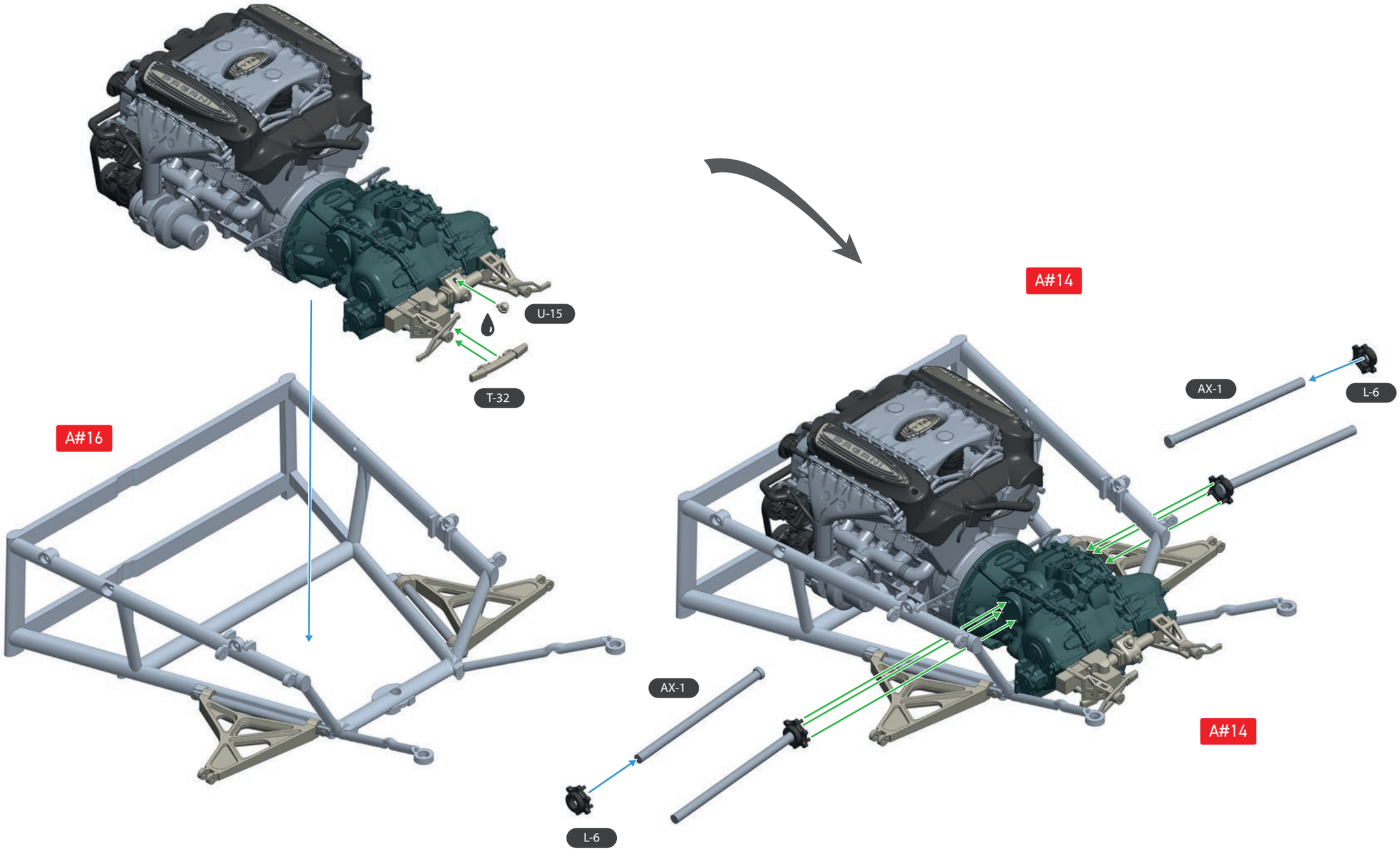

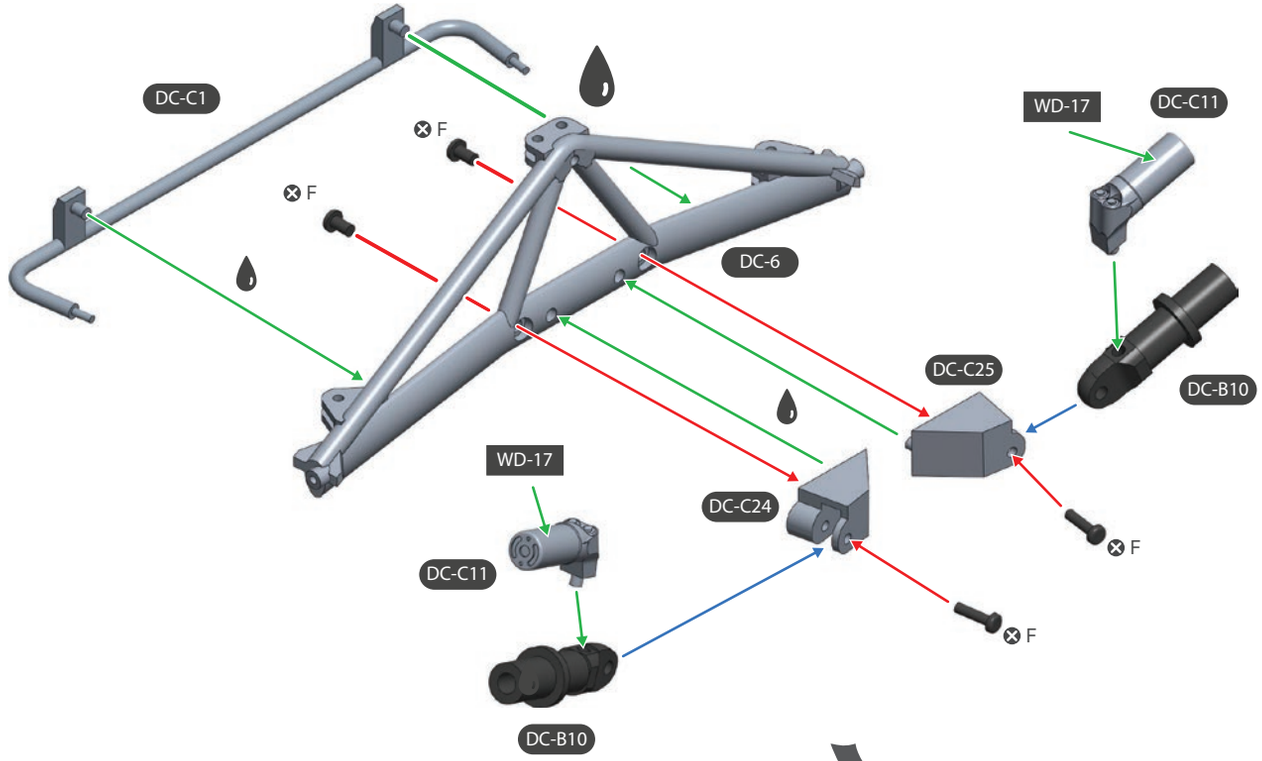
DC-C1
F
F
DC-6
WD-17
DC-C11
DC-C25
DC-B10
WD-17
DC-C24
DC-C11
F
F
DC-B10

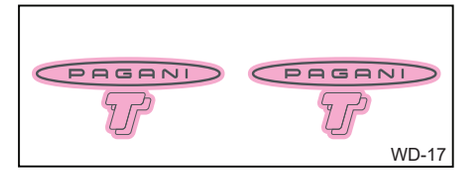
PAGANI
PAGANI
WD-17

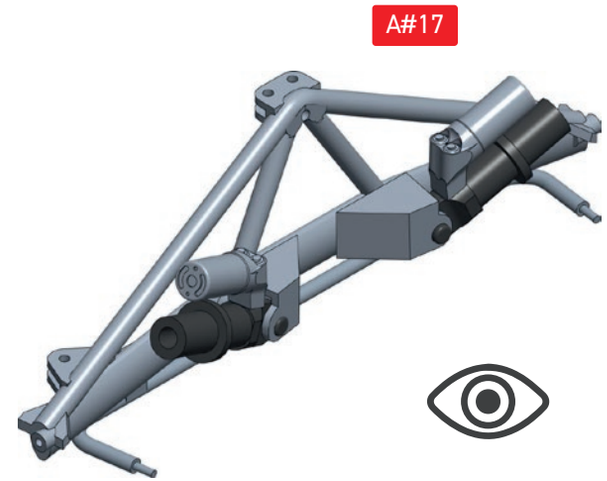
A#17

SCREW F = 4

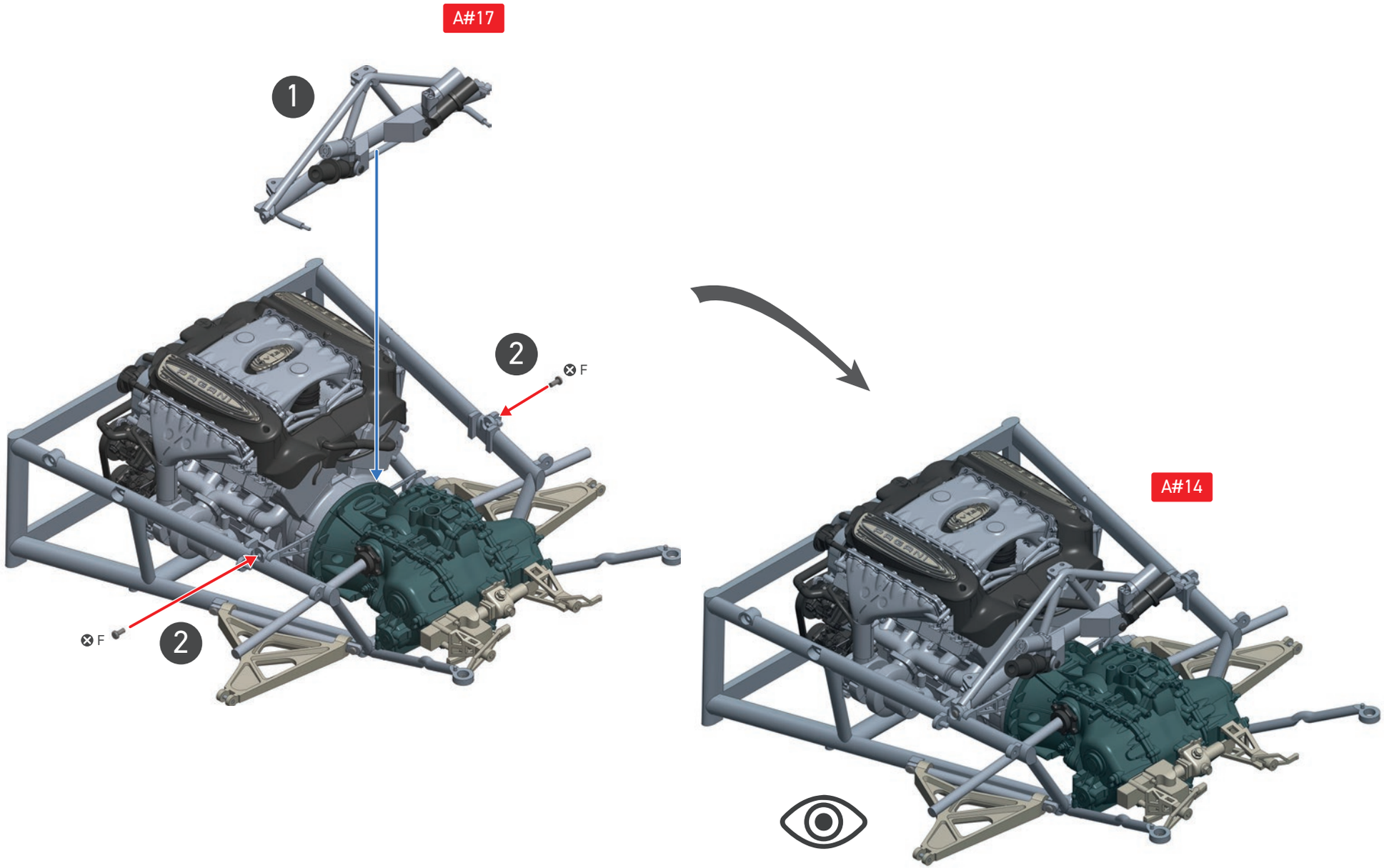

SCREW F = 2

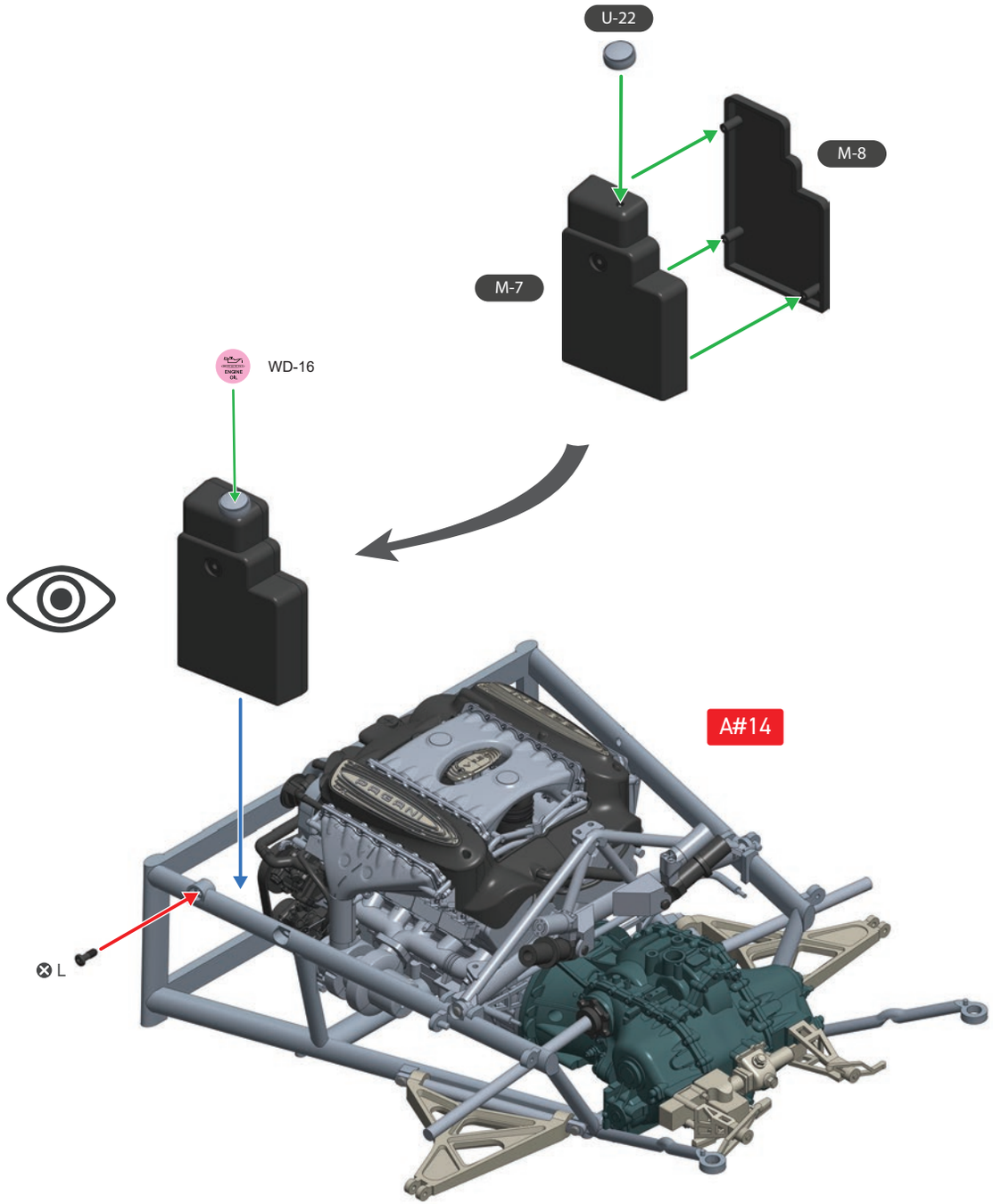

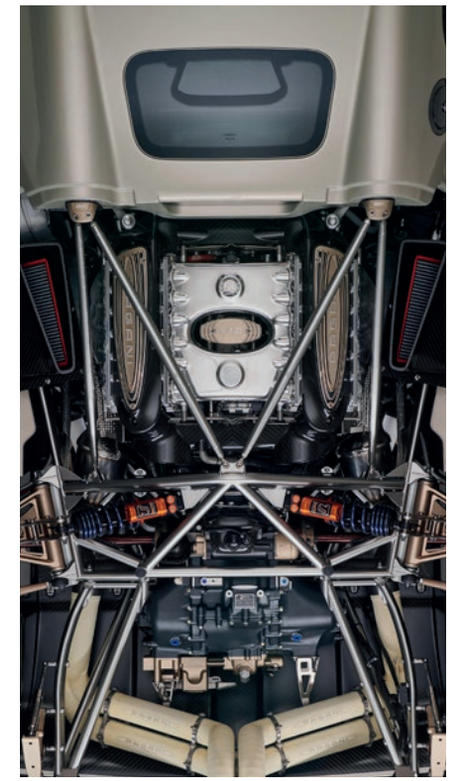

SCREW L = 1

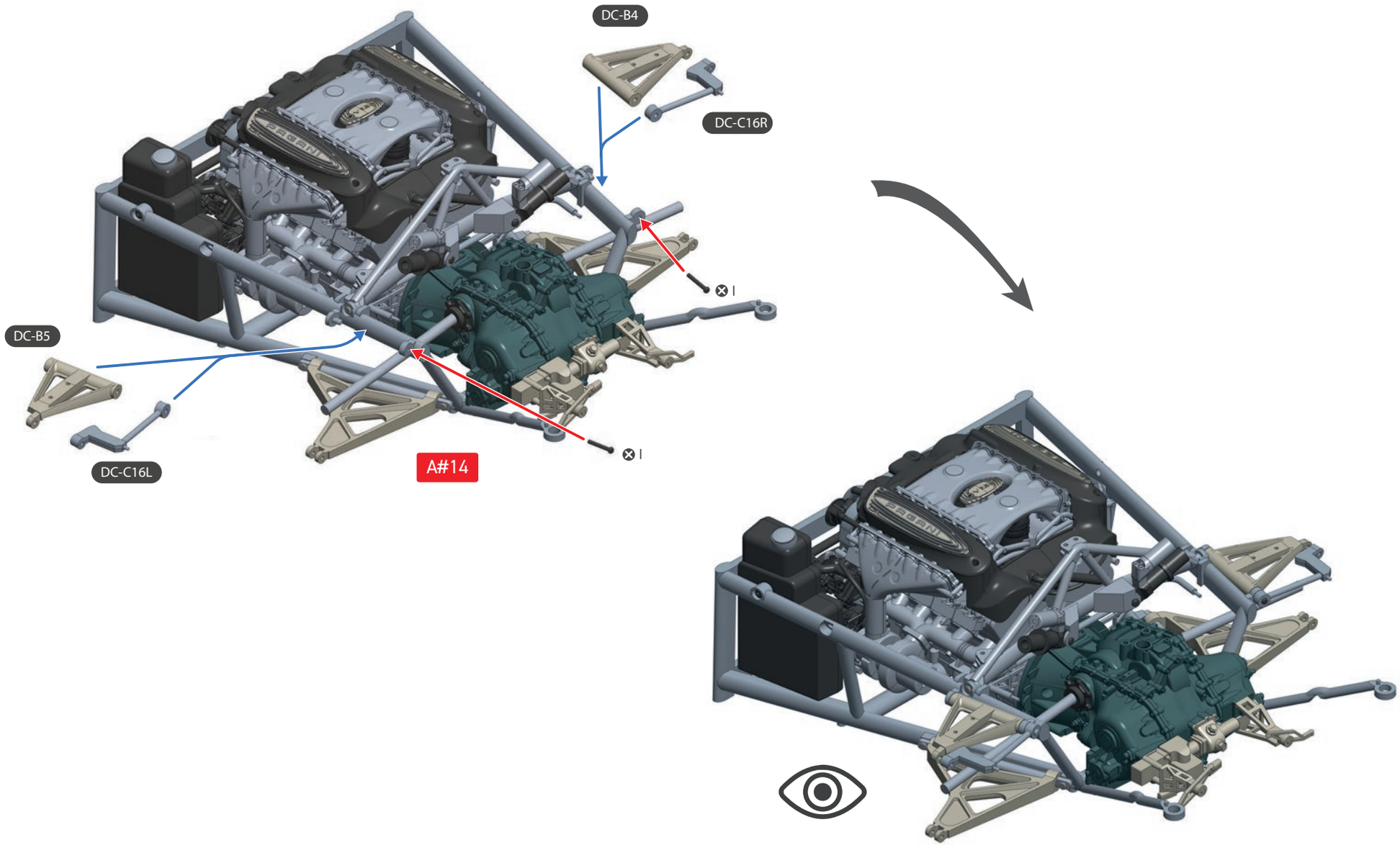

SCREW I = 2

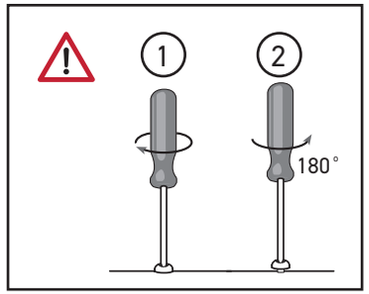

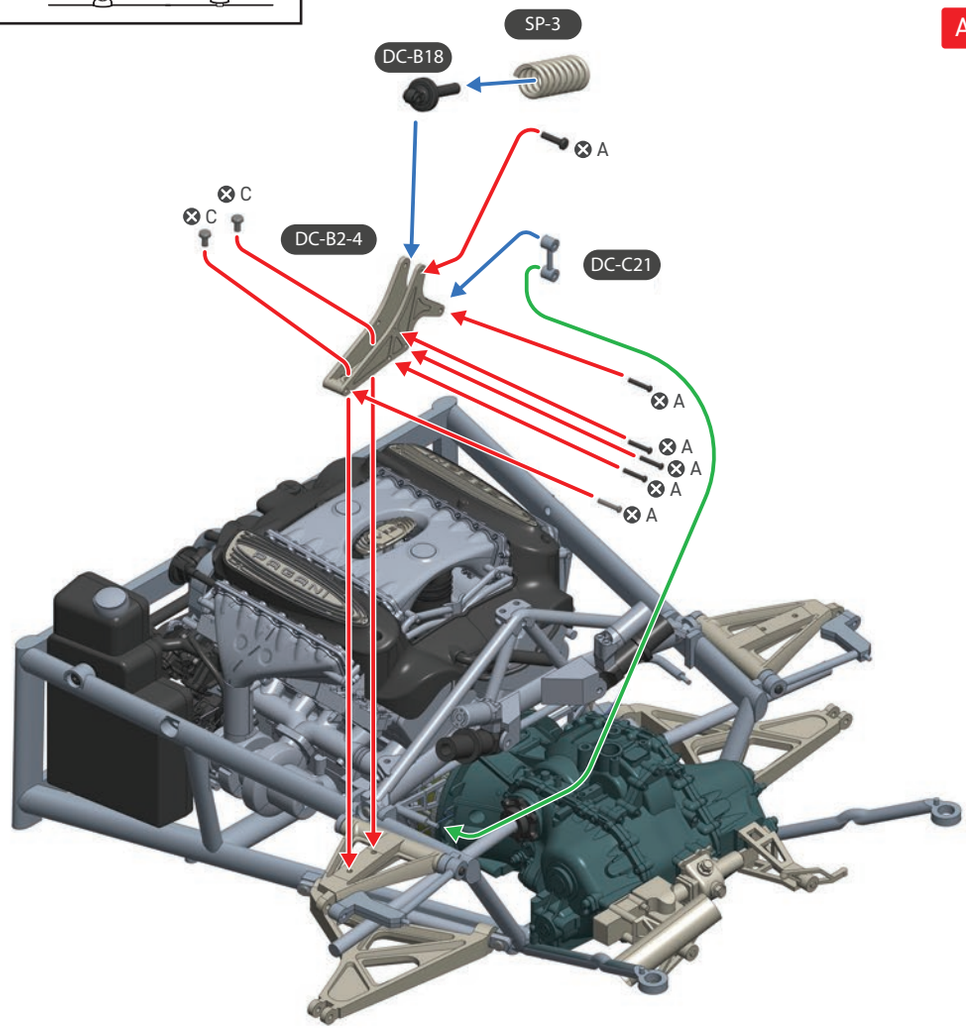

A#14

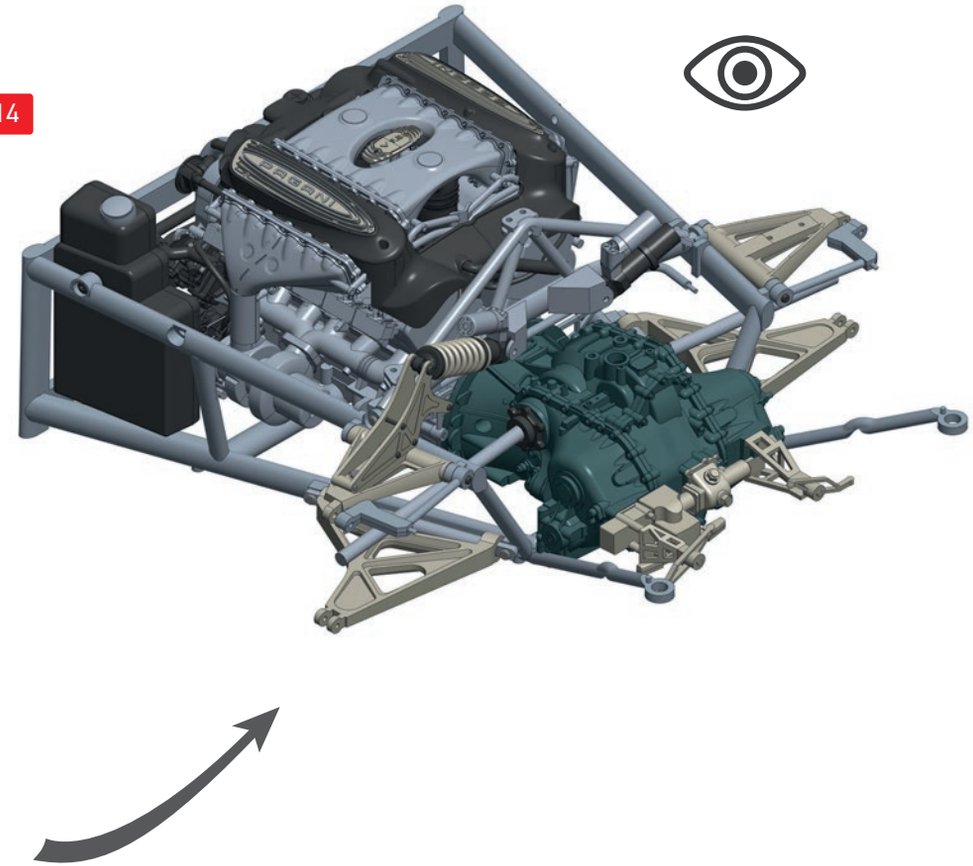

SCREW A = 6
SCREW C = 2

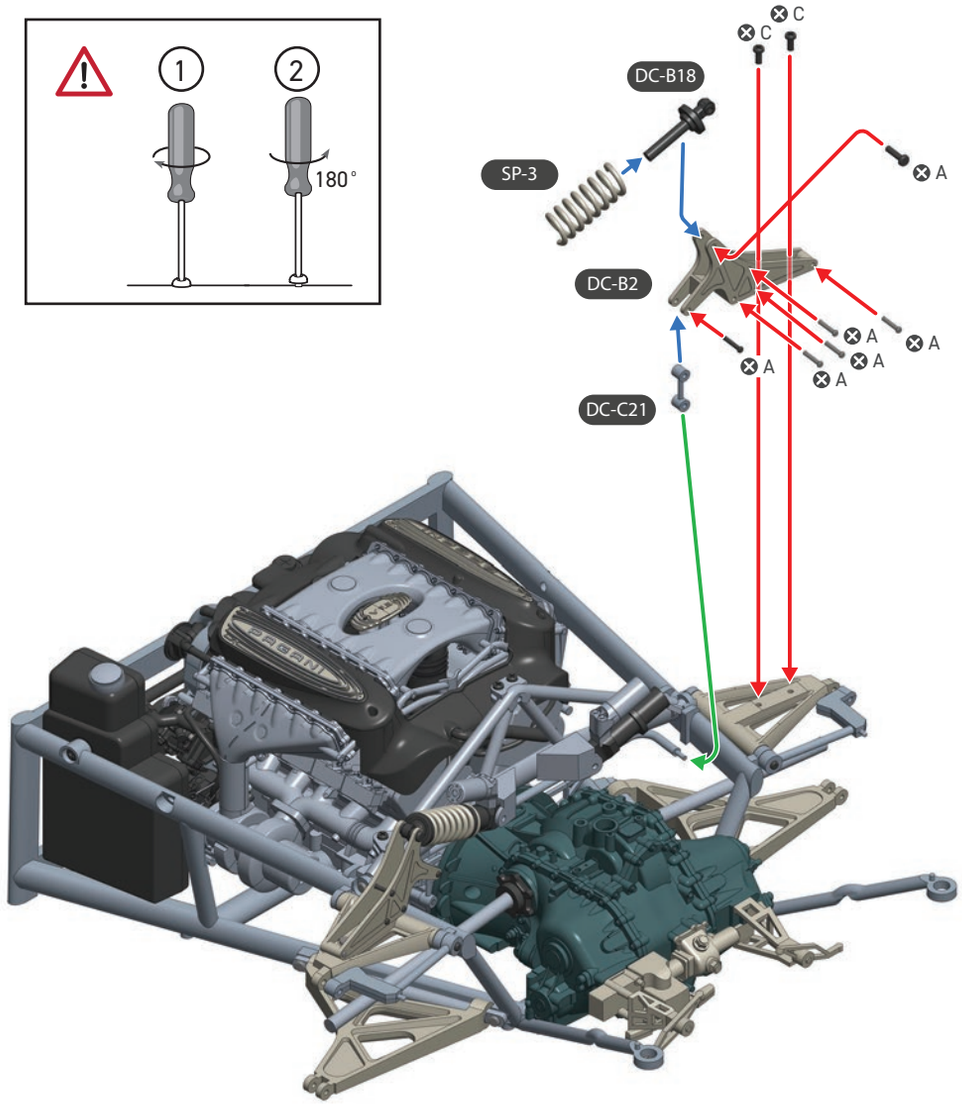

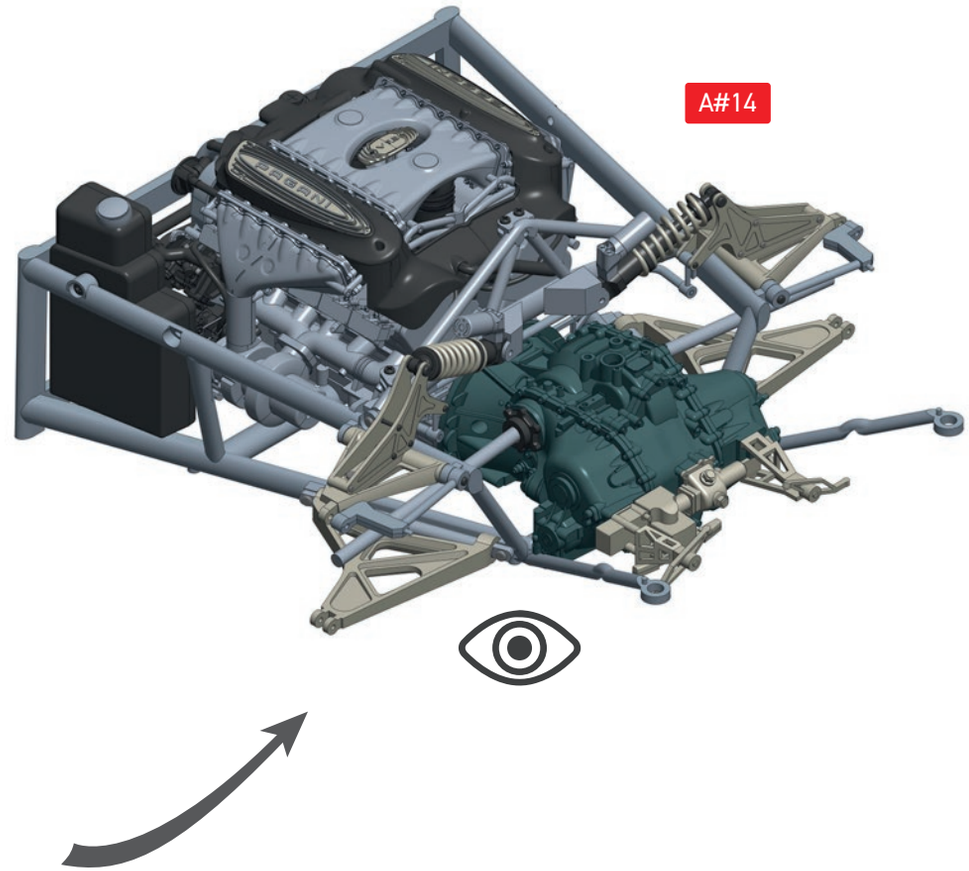

SCREW A = 6
SCREW C = 2

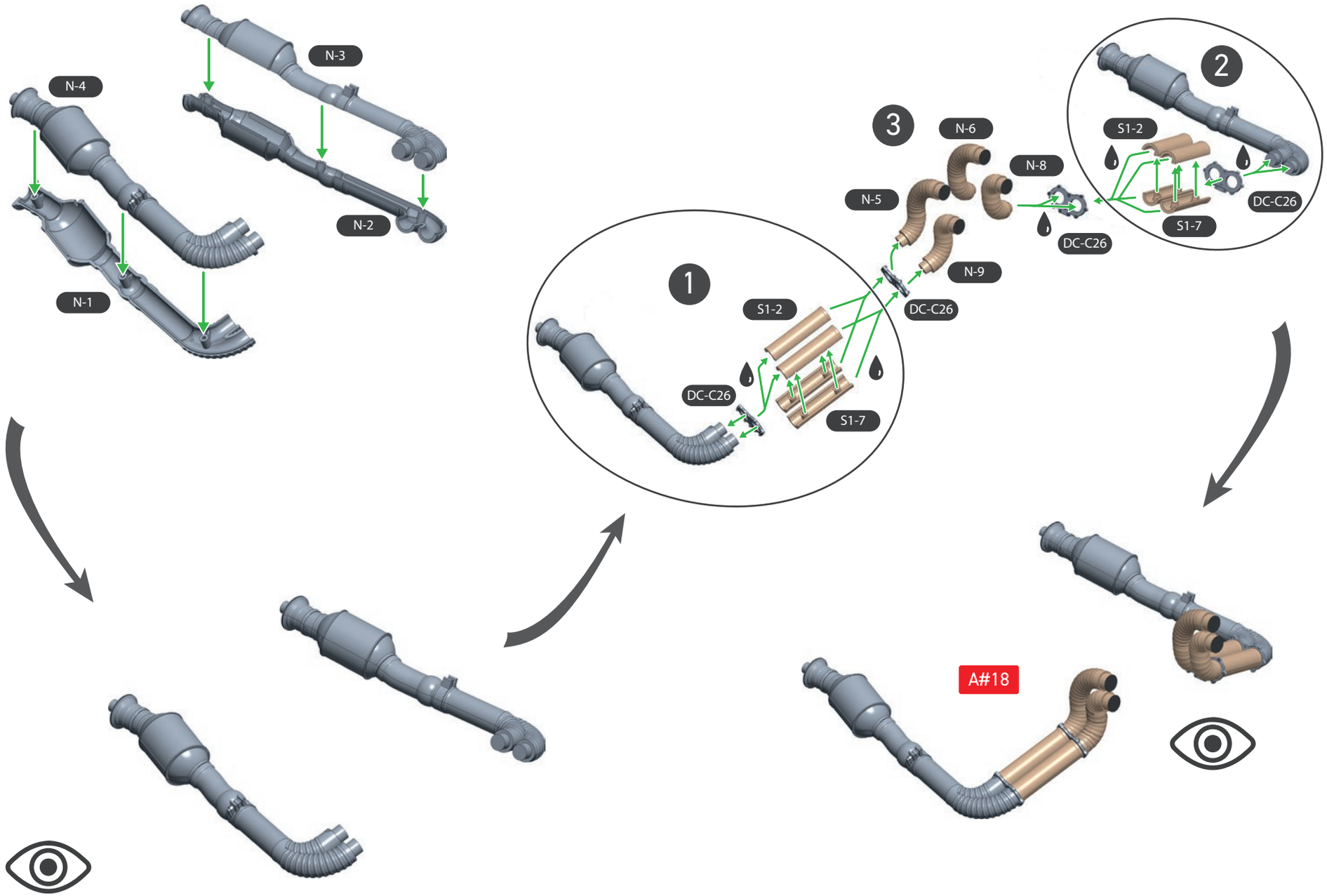
N-4
N-3
N-2
N-1
1
S1-2
DC-C26
S1-7
3
N-6
N-5
N-8
N-9
DC-C26
DC-C26
2
S1-2
DC-C26
S1-7
A#18